SHELL BUILDING ONLY

PLANTATION PLAZA

HWY 27
LEESBURG, FLORIDA

LAKE COUNTY BUILDING SERVICES
This document must be on jobsite for inspections.
This document was reviewed for code compliance; this does not relieve the applicant from correcting errors and omissions and complying with the current Florida Building Code.

2020 11 0224

Fred Martin
Digitally signed by Fred Martin
Date: 2021.11.24 14:38:19 -05'00'

ARCHITECT

JWB ARCHITECTS
2295 S HIAWASSEE RD
SUITE 304
ORLANDO, FLORIDA 32835
407.298.5020

PROJECT LOCATION

NORTH

SITE MAP

SCALE: NOT TO SCALE

SHEET INDEX

COVER SHEET

ARCHITECTURAL

A001 ARCHITECTURAL SITE PLAN
A002 ENLARGED SITE PLAN
A003 SITE DETAILS
A101 OVERALL FLOOR PLAN
A102 OVERALL REFLECTED CEILING PLAN
A103 ROOF PLAN
A200 LIFE SAFETY PLAN
A201A MAIN FLOOR PLAN - AREA A
A201B MAIN FLOOR PLAN - AREA B
A202A REFLECTED CEILING PLAN - AREA A
A202B REFLECTED CEILING PLAN - AREA B
A301 ELEVATIONS
A302 ELEVATIONS
A303 ELEVATIONS
A401 SECTIONS
A402 SECTIONS
A403 SECTIONS
A404 SECTIONS
A501 SCHEDULES AND DETAILS

STRUCTURAL

S1 FOUNDATION PLAN
S1.1 FOUNDATION PLAN
S2 ROOF FRAMING PLAN
S2.1 ROOF FRAMING PLAN
S3 UPPER ROOF PLAN
S3.1 UPPER ROOF PLAN
S4 FOUNDATION DETAILS
S5 DETAILS & SECTIONS
S6 DETAILS & SECTIONS
S7 DETAILS & SECTIONS
S8 NOTES

MECHANICAL

M100 LEGEND AND NOTES - HVAC
M201 FLOOR PLAN - HVAC
M301 DETAILS - HVAC

PLUMBING

P100 LEGEND, NOTES AND SCHEDULES - PLUMBING
P201 PLUMBING PLAN

ELECTRICAL

E100 ELECTRICAL LEGEND, NOTES & SPECS
E200 LIGHTING PLAN
E300 POWER PLAN
E400 RISER & PANEL SCHEDULES

CODE INFORMATION

PROJECT SQUARE FOOTAGE:

TOTAL SQUARE FOOTAGE = 19,629 SQFT
NET RENTABLE AREA = 18,053 SQFT

CONSTRUCTION TYPE:

TYPE II-B - (SPRINKLERED)

OCCUPANCY:

B-BUSINESS

APPLICABLE BUILDING CODES:

- 2017 FBC, 6TH EDITION, BUILDING
- 2017 FBC, 6TH EDITION, EXISTING BUILDING
- 2017 FBC, 6TH EDITION, ACCESSIBILITY
- 2017 FBC, 6TH EDITION, MECHANICAL
- 2017 FBC, 6TH EDITION, PLUMBING
- 2017 FLORIDA FIRE PREVENTION CODE 6TH EDITION
- 2014 NATIONAL ELECTRIC CODE

SCOPE OF WORK:

SCOPE OF WORK CONSIST OF A NEW CMU EXTERIOR WALL BUILDING (SHELL ONLY) WITH PLUMBING STUB-UPS FOR FUTURE UPFIT. NO INTERIOR WALL OR FLOOR FINISHES TO BE APPLIED.

4

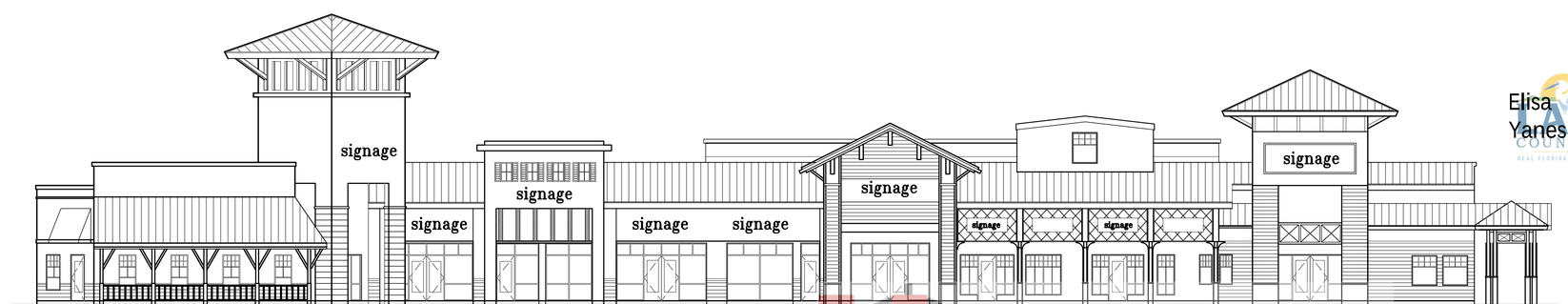

Elisa Yanes
Digitally signed by Elisa Yanes
Date: 2021.12.02 15:53:27 -05'00'

GENERAL SPECIFICATION:

THE GENERAL CONTRACTOR SHALL SECURE ALL PAINT COLORS PLASTIC LAMINATE COLORS FLOOR FINISH COLORS AND TYPE FROM THE OWNER.
THE GENERAL CONTRACTOR SHALL VISIT THE PROJECT SITE AND FAMILIARIZE HIMSELF WITH ALL THE EXISTING CONDITIONS.
ALL DIMENSIONS SHALL BE CALCULATED AND DRAWINGS SHALL NOT BE SCALED. QUESTIONS CONCERNING DIMENSIONING SHALL BE REFERED TO THE ARCHITECT.
ALL WORK SHALL BE PERFORMED IN ACCORDANCE WITH ALL CODES HAVING JURISDICTION OVER HIS PROJECT.
ALL WORK SHALL BE PERFORMED IN ACCORDANCE WITH THE AIA DOCUMENT A205 1993 EDITION GENERAL CONDITIONS OF THE CONTRACT FOR CONSTRUCTION OF A SMALL PROJECT.
FLOOR CONSTRUCTION SEE SHELL BUILDING PERMITTED DRAWINGS – BUILDING 12, SHEET S–1 FOUNDATION PLAN.
PROVIDE MOISTURE AND HEAT MITIGATION WITHIN SUITE DURING SLAB CURING TIME PERIOD.
INSTALL WOOD BLOCKING SUFFICIENT TO CARRY THE LOADS APPLIED BY GRAB BARS HANGING CABINETS PLUMBING FIXTURES OR ANY SUCH APPLIED EQUIPMENT.

A. ROUGH CARPENTRY
1. WHERE INSTALLING BLOCKING FOR EQUIPMENT TO BE INSTALLED BY OTHERS WHERE LOCATIONS ARE NOT SUFFICIENTLY INDICATED ON DRAWINGS VERIFY THE EXACT LOCATION WITH THE ARCHITECT.
2. ROUGH HARDWARE: PROVIDE AND INSTALL ALL ROUGH HARDWARE AND METAL FASTENINGS OF SIZE AND TYPE REQUIRED FOR PROPER INSTALLATION AND CODE APPROVAL. ALL ROUGH HARDWARE SHALL EXCEED THE STRENGTH OF THE MEMBER ATTACHED.
5. ALL CONCEALED WOOD SHALL BE FIRE RESISTANT TREATED AS REQUIRED BY FBC CODE.

B. FINISH CARPENTRY & MILLWORK:
1. FABRICATION AND INSTALLATION OF ALL CORNICE, MILLWORK, TRIM, PANELING AND MOLDING WORK.
2. FURNISHING DOORS, WOOD TRIM AND FRAMES. AS SPECIFIED IN THE DOOR SCHEDULE.

C. INSTALLATION:
1. ALL MOLDED MEMBERS AND TRIM SHALL BE MITERED AT OUTSIDE OR COPED AT INSIDE CORNERS.
2. SCRIBING MITERING AND JOINING SHALL BE COMPLETED ACCURATELY, NEATLY, AND TIGHT, REQUIRING NO OR VERY LITTLE FILLING.
3. APPLY DOOR HARDWARE IN ACCORDANCE WITH MANUFACTURER'S INSTRUCTIONS FIT ACCURATELY, APPLY SECURELY AND ADJUST CAREFULLY.

D. GYPSUM WALLBOARD ASSEMBLIES:
1. REFER TO WALL TYPES FOR ALL ASSEMBLIES OF WALLS
2. INSTALL ACCORDING TO MANUFACTURERS INSTRUCTIONS.
3. TILED OR WET AREAS TO HAVE WATER RESISTANT 5/8" GYP. BD.
4. FINISH JOINTS AND NAILHEADS WITH 3 COAT PERF–A–TAPE JOINT SYSTEM PROPERLY SANDED SCHEDULE. PERF–A–BEAD AT ALL EXTERNAL CORNERS OF 120 DEGREES OR GREATER. DURA–BEAD AT ALL 90 DEGREE EXTERNAL CORNERS – NO. 200 A TRIM AT DISSIMILAR MATERIALS.

E. PAINTING:
1. ALL COLORS AS SPECIFIED IN THE FINISH SCHEDULE.
2. ALL MANUFACTURERS SPECIFIED ARE TO ESTABLISH COLOR, QUANTITY AND TYPE OF FINISH. COMPARABLE PRODUCTS OF OTHER MANUFACTURERS WILL BE FULLY CONSIDERED WITH APPROPRIATE SUBMITTALS. ALL PRODUCTS MUST BE MANUFACTURERS 1ST LINE QUALITY.
3. GYP. BD. WALL – LAVATORIES ONLY
a. 1ST COAT – OLYMPIC, PRIMER/SEALER, TINT TO FINISH COLOR
b. 2ND COAT – OLYMPIC, EGGSHELL ENAMEL, COLOR AS SPECIFIED
GYP. BD. WALLS, SOFFITS, BULKHEADS, ETC.
a. 1ST COAT – OLYMPIC, LATEX OR ACRYLIC PRIMER/SEALER, TINT TO FINISH COLOR
b. 2ND COAT – OLYMPIC, EGGSHELL ENAMEL, COLOR AS SPECIFIED
GYP. BD. WALL AND CEILING – RECEPTION, CORRIDOR, RESTROOM SHOWER, AND STEAM ROOM
a. 1ST COAT – SHERWIN WILLIAMS, LATEX OR ACRYLIC PRIMER/SEALER, TINT TO FINISH COLOR
b. 2ND COAT – SHERWIN WILLIAMS, LATEX, HIGH–GLOSS, OR AS NOTED, COLOR AS SPECIFIED

4. WOODWORK AND TRIM
a. 1ST COAT – ENAMEL UNDERCOAT
b. 2ND COAT – STAIN FINISH, COLOR AS SPECIFIED. SAND BETWEEN COATS AND CLEAN THOROUGHLY
DOORS
a. 1ST COAT – STAIN COLOR – MATCH ARCHITECTS SAMPLE
b. 2ND COAT – SEALER, SAND
c. 3RD COAT – GLOSS SEALER, SAND
d. 4TH COAT – SATIN FINISH COAT
5. APPLICATOR MUST EXAMINE AREAS AND CONDITION UNDER WHICH PAINTING WORK IS TO BE APPLIED AND NOTIFY CONTRACTOR IN WRITING OF CONDITIONS DETRIMENTAL TO PROPER AND TIMELY COMPLETION OF WORK. DO NOT PROCEED WITH WORK UNTIL UNSATISFACTORY CONDITIONS HAVE BEEN CORRECTED. PROTECT CARPET AND OTHER FINISHES FROM SPILL AND SPATTERS.
6. DO NOT PAINT OVER DIRT, RUST, SCALE, GREASE, MOISTURE, DEFECTS OR CONDITIONS OTHERWISE DETRIMENTAL TO FORMATION OF A DURABLE, UNMARRED, UNBLEMISHED PAINT FILM.
7. PERFORM PREPARATION AND CLEANING PROCEDURES IN ACCORDANCE WITH PAINT MANUFACTURERS INSTRUCTIONS AND AS HERIEN SPECIFIED FOR EACH PARTICULAR SUBSTRATE CONDITION.
8. REMOVE HARDWARE, HARDWARE ACCESSORIES, PLATE, LIGHTING FIXTURES. AND SIMILAR ITEMS IN PLACE AND NOT TO BE FINISH PAINTED OR PROVIDE SURFACE APPLIED PROTECTION PRIOR TO SURFACE PREPARATION AND PAINTING OPERATIONS. REMOVE IF NECESSARY FOR COMPLETE PAINTING OF ITEMS AND ADJACENT SURFACES. FOLLOWING COMPLETION OF PAINTING OF EACH SPACE OF AREA, REINSTALL REMOVED ITEMS.
9. CLEAN SURFACES TO BE PAINTED BEFORE APPLYING PAINT OR SURFACE TREATMENTS.
10. PAINT APPLICATION TO WALLBOARD MAY BE BRUSH, ROLLER OR AIRLESS SPRAY OR BRUSH. APPLY PAINT IN ACCORDANCE WITH MANUFACTURERS DIRECTIONS.
11. APPLY ADDITIONAL COAT OR STAIN–KILL PRIMER WHEN STAINS OR OR OTHER CONDITION SHOWS TROUGH FINAL COAT OF PAINT UNTIL PAINT FILM IS OF UNIFORM FINISH, COLOR AND APPEARANCE. GIVE SPECIAL ATTENTION TO INSURE THAT SURFACES INCLUDING EDGES CORNERS CREVICES WELDS AND EXPOSED FASTENERS RECEIVE A DRY FILM THICKNESS EQUIVALENT TO THAT OF FLAT SURFACES.
12. APPLY FIRST COAT MATERIAL TO SURFACES THAT HAVE BEEN CLEANED PRETREATED OR OTHERWISE PREPARED FOR PAINTING AS SOON AS PRACTICAL AFTER PREPARATION AND BEFORE SUBSEQUENT SURFACE DETERIORATION.
13. ALLOW SUFFICIENT TIME BETWEEN SUCCESSIVE COATING TO PERMIT PROPER DRYING.
14. MINIMUM COATING THICKNESS: APPLY MATERIALS AT NOT LESS THAN MANUFACTURERS RECOMMENDED SPREADING RATE.
15. PRIME COATS: APPLY PRIME COAT OF PAINT TO MATERIAL WHICH IS REQUIRED TO BE PAINTED OR FINISHED AND WHICH HAS NOT BEEN PRIME COATED BY OTHERS.
16. UPON COMPLETION OF PAINTING WORK, REMOVE SPATTERED PAINT BY PROPER METHODS OF WASHING AND SCRAPING USING CARE NOT TO SCRATCH OR OTHERWISE DAMAGE FINISHED SURFACES.
17. AT THE COMPLETION OF WORK OF OTHER TRADES, TOUCHUP AND RESTORE ALL DAMAGED OR DEFACED SURFACES.

F. SHEET VINYL AND VINYL BASE:
1. RUBBER WALL BASE TO BE INSTALLED IN ALL AREAS UNLESS SPECIFICALLY NOTED OTHERWISE IN DRAWINGS.

HARBCO
GENERAL CONTRACTORS, INC.

JWB ARCHITECTS
LIC. # AA26001266
2295 S HIAWASSEE RD
SUITE 304
ORLANDO FLORIDA 32835
PH:407.298.5020
FX:407.298.5030

John W Burt
Digitally signed by John W Burt
Date: 2021.11.04 16:16:33 -04'00'

PLANTATION PLAZA
HWY 27
LEESBURG, FLORIDA

STATE OF FLORIDA
JOHN BURT
AR93163
REGISTERED ARCHITECT

Project: 19-019

1 11-01-19-BLDG REVIEW CHANGES
2 03-18-21-BLDG REVIEW CHANGES
3 05-05-21-BLDG REVIEW CHANGES
4 10-21-21-BLDG REVIEW CHANGES

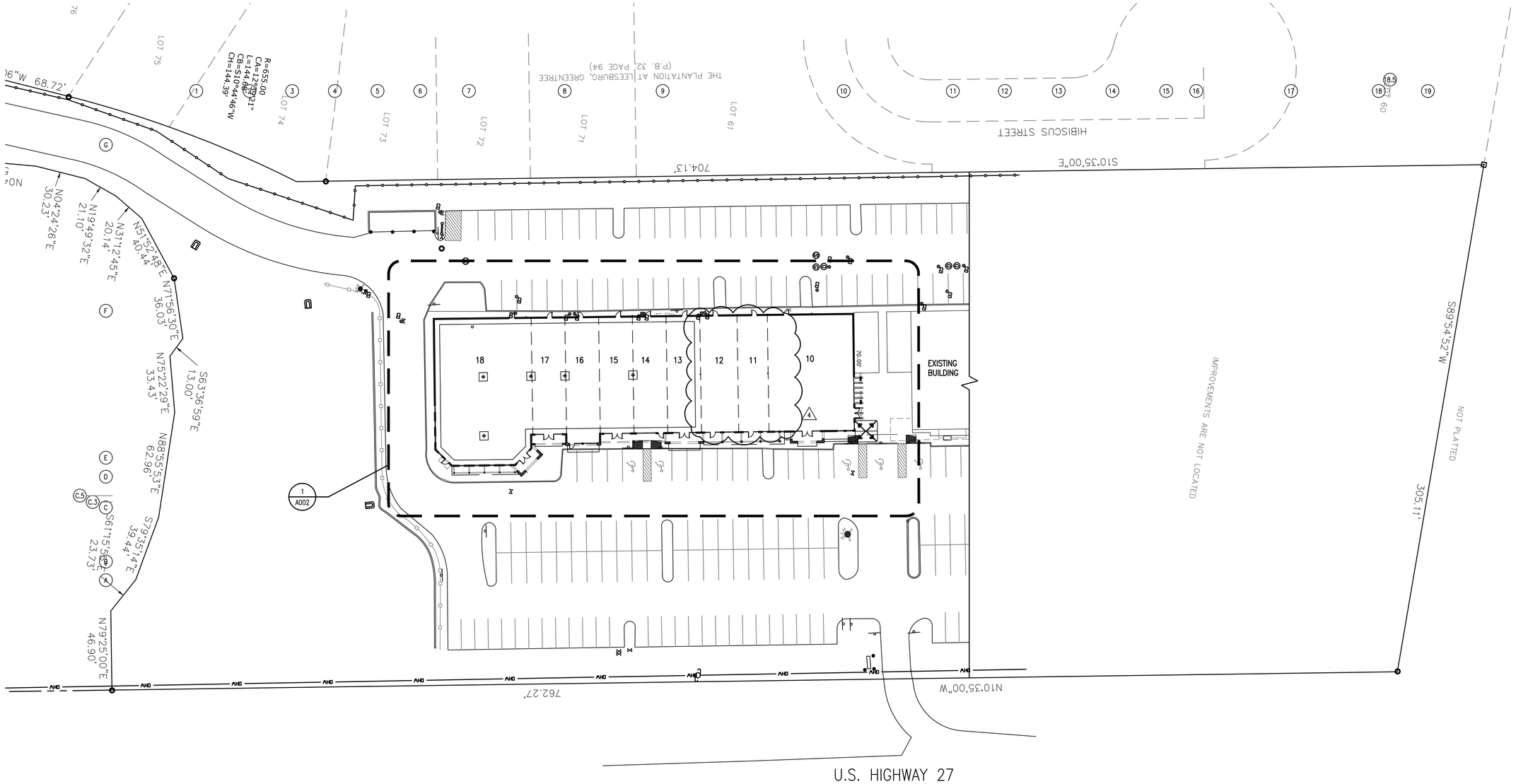

NORTH

1 / A001 **OVERALL ARCHITECTURAL SITE PLAN**

SCALE: 1" = 30 ' - 0 "

HARBCO GENERAL CONTRACTORS, INC.

LAKE COUNTY BUILDING SERVICES
This document must be on jobsite for inspections.
This document was reviewed for code compliance; this does not relieve the applicant from correcting errors and omissions and complying with the current Florida Building Code.

JWB ARCHITECTS
LIC. # AA26001266
2295 S. HIAWASSEE RD.
SUITE 304
ORLANDO, FLORIDA 32835
PH:407.298-5020
FX:407.298-5030

Owner:
ALI JAWAD

ARCHITECTURAL SITE PLAN

PLANTATION PLAZA
HWY 27
LEESBURG, FLORIDA

Architect of Record:
John W. Burt - AR93163

Revisions:
4 10-21-21-BLDG REVIEW CHANGES

Date:	Drawn By:	Checked By:
06-05-2019	RR	JWB

Project No.
19-019

Sheet No.
A001

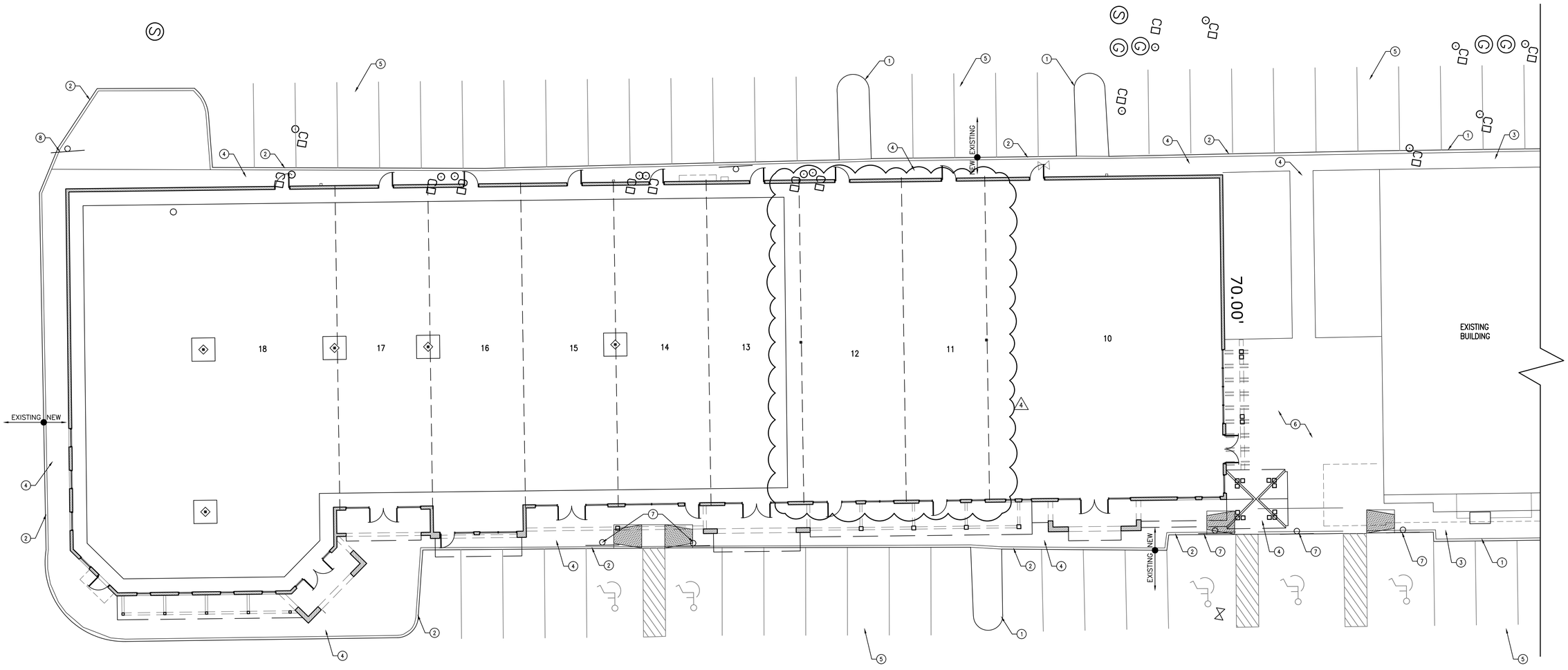

NORTH

1 / A002 **ENLARGED SITE PLAN**

SCALE: 3/32" = 1'-0"

SITE PLAN NOTES:

1. EXISTING CURB TO REMAIN
2. NEW CURB. SEE DETAILS A003
3. EXISTING CONC. SIDEWALK
4. NEW CONC. SIDEWALK SEE DETAILS A003
5. EXISTING PARKING TO REMAIN
6. PAVERS SELECTED BY OWNER.
7. EXISTING HANDICAP PARKING AND SIGN TO REMAIN
8. EXISTING SIGN TO REMAIN

HARBCO
GENERAL CONTRACTORS, INC.

LAKE COUNTY BUILDING SERVICES
This document must be on jobsite for inspections.
This document was reviewed for code compliance; this does not relieve the applicant from correcting errors and omissions and complying with the current Florida Building Code.

JWB ARCHITECTS
LIC. # AA26001266
2295 S. HIAWASSEE RD.
SUITE 304
ORLANDO, FLORIDA 32835
PH:407.298-5020
FX:407.298-5030

Owner:

ALI JAWAD

ENLARGED SITE PLAN

PLANTATION PLAZA

HWY 27
LEESBURG, FLORIDA

Architect of Record
John W. Burt - AR93163

Revisions:

4 10-21-21-BLDG REVIEW CHANGES

Date:	Drawn By:	Checked By:
06-05-2019	RR	JWB

Project No.
19-019

Sheet No.
A002

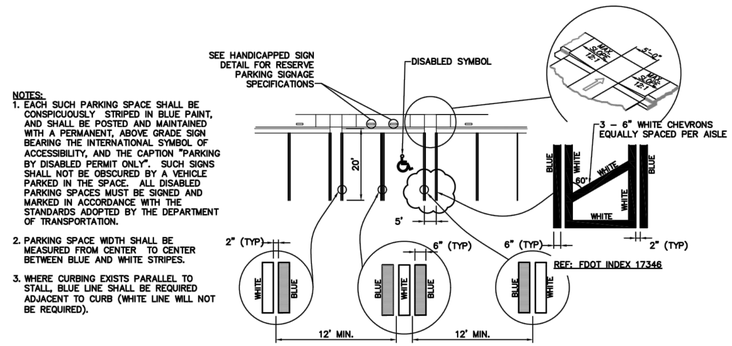

HANDICAPPED PARKING DETAIL

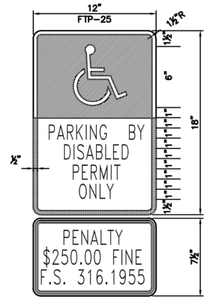

NOTES:
1. ALL LETTERS SHALL BE BLACK AND 1" IN HEIGHT. LETTERS ARE TO BE SERIES "B" OR "C", PER MUTCD.
2. TOP PORTION OF SIGN SHALL HAVE REFLECTORIZED (ENGINEERING GRADE) BLUE BACKGROUND WITH WHITE REFLECTORIZED LEGEND AND BORDER.
3. BOTTOM PORTION OF SIGN SHALL HAVE A REFLECTORIZED (ENGINEERING GRADE) WHITE BACKGROUND WITH BLACK BORDER.
4. ONE SIGN REQUIRED FOR EACH PARKING SPACE.
5. HEIGHT OF SIGN SHALL BE IN ACCORDANCE WITH SECTION 24-23 OF THE MANUAL ON UNIFORMED TRAFFIC CONTROL DEVICES (MUTCD)

HANDICAPPED SIGN DETAIL

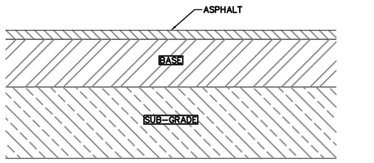

ASPHALT	1.5"	TYPE S-III ASPHALTING CONCRETE SURFACE COURSE
BASE	6"	SOIL CEMENT LBR-100 COMPACTED TO 98% OF AASHTO T-180
SUB-BASE	8"	NORMAL COMPACTED SUB-GRADE LBR 40 COMPACTED TO 98% AASHTO T-180

ASPHALT PAVEMENT SECTION

NTS

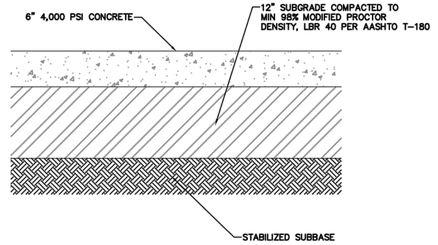

CONCRETE PAVEMENT SECTION

NTS

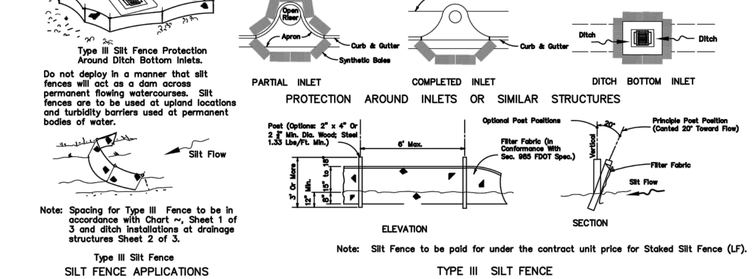

INLET EROSION CONTROL DETAILS

NTS

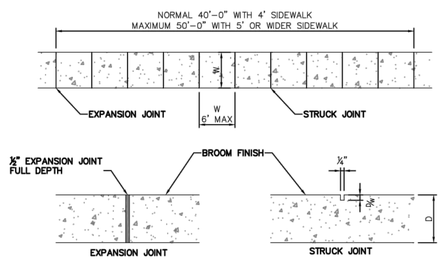

TYPICAL SIDEWALK

NTS

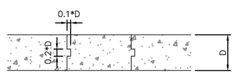

CONSTRUCTION JOINT

NTS

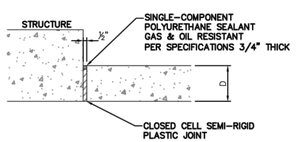

1/2" EXPANSION JOINT

NTS

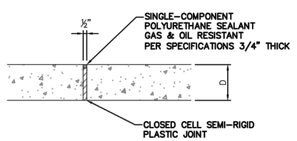

1/2" EXPANSION JOINT

NTS

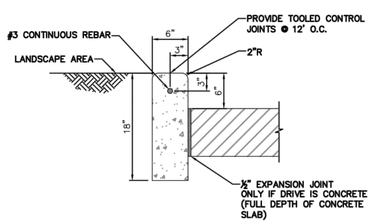

CAST-IN-PLACE CONCRETE CURB

NTS

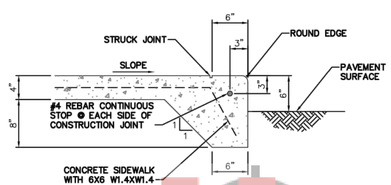

INTEGRAL CURB AND SIDEWALK

NTS

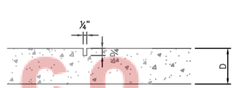

CONTROL JOINT

NTS

LAKE COUNTY BUILDING SERVICES
This document must be on jobsite for inspections.
This document was reviewed for code compliance; this does not relieve the applicant from correcting errors and omissions and complying with the current Florida Building Code.

HARBCO GENERAL CONTRACTORS, INC.

JWB ARCHITECTS
LIC. # AA26001266
2295 S. HIAWASSEE RD.
SUITE 304
ORLANDO, FLORIDA 32835
PH:407.298-5020
FX:407.298-5030

Owner:
ALI JAWAD

SITE DETAILS

PLANTATION PLAZA
HWY 27
LEESBURG, FLORIDA

Architect of Record
John W. Burt – AR93163

Revisions:

Date:	Drawn By:	Checked By:
06-05-2019	RR	JWB

Project No.
19-019

Sheet No.
A003

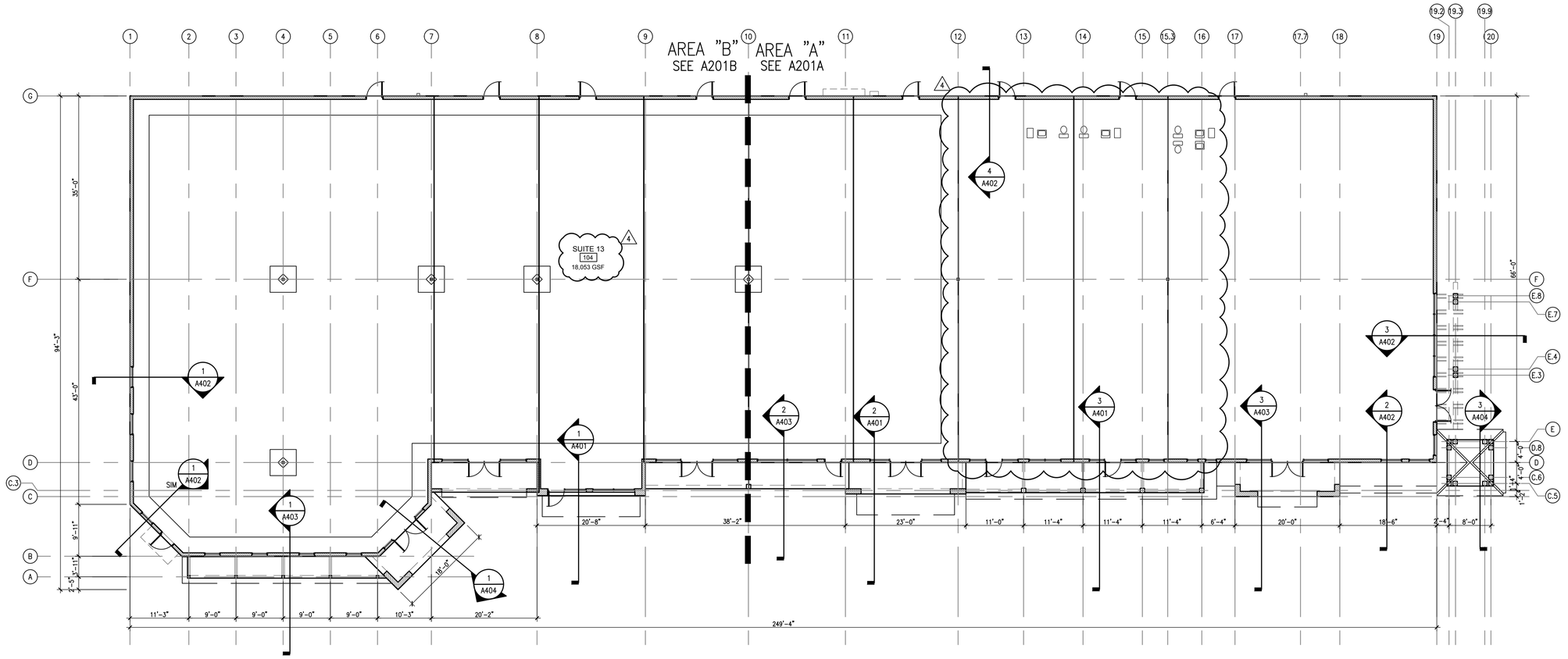

NORTH

1 / A101 **OVERALL MAIN FLOOR PLAN**

SCALE: 3 / 32" = 1 ' - 0 "

HARBCO
GENERAL CONTRACTORS, INC.

LAKE COUNTY BUILDING SERVICES

This document must be on jobsite for inspections.

This document was reviewed for code compliance; this does not relieve the applicant from correcting errors and omissions and complying with the current Florida Building Code.

JWB ARCHITECTS
LIC. # AA26001266
2295 S. HIAWASSEE RD.
SUITE 304
ORLANDO, FLORIDA 32835
PH:407.298-5020
FX:407.298-5030

Owner:

ALI JAWAD

OVERALL MAIN FLOOR PLAN

PLANTATION PLAZA
HWY 27
LEESBURG, FLORIDA

Architect of Record:
John W. Burt - AR93163

Revisions:

4 10-21-21-BLDG REVIEW CHANGES

Date:	Drawn By:	Checked By:
06-05-2019	RR	JWB

Project No.
19-019

Sheet No.
A101

GEN. CEILING NOTES:

1. ALL WALLS EXTEND TO ROOF DECK, U.N.O.
2. LIGHTS & DIFFUSERS ON DRAWINGS ARE FOR LOCATION ONLY. COORDINATE WITH MECHANICAL & ELECTRICAL DRAWINGS FOR EXACT SPECIFICATIONS AND VERIFICATION OF QUANTITY.
3. ALL CEILINGS ARE TO BE INSTALLED AT +10-0" A.F.F. UNLESS NOTED OTHERWISE.
4. CENTER ACCOUSTICAL CEILING PANELS IN EACH DIRECTION WITHIN THE MAIN PORTION OF ANY ROOM OR SPACE. UNLESS NOTED OTHERWISE.
5. CJ = CONTROL JOINT, SEE PLAN.

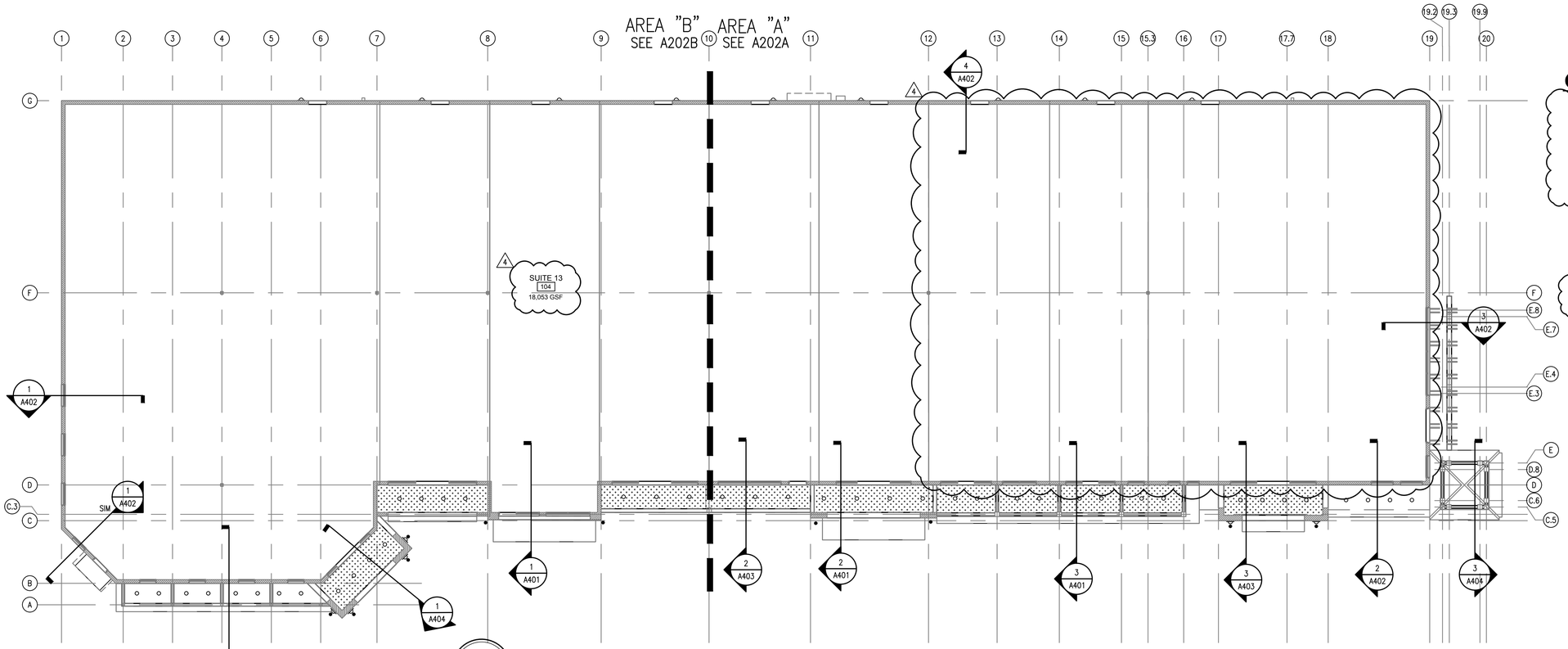

1 A102 **OVERALL REFLECTED CEILING PLAN**
SCALE: 3 / 32 = 1 ' - 0 "

CEILING LEGEND:

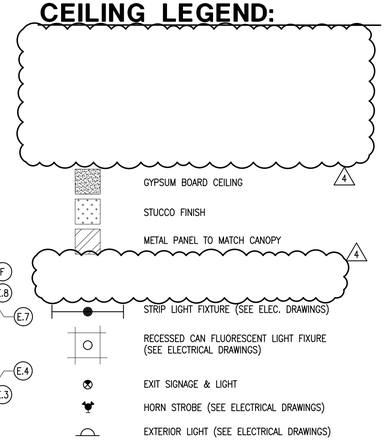

JWB ARCHITECTS
LIC. # AA26001266
2295 S. HIAWASSEE RD.
SUITE 304
ORLANDO, FLORIDA 32835
PH:407.298-5020
FX:407.298-5030

Owner:
ALI JAWAD

OVERALL REFLECTED CEILING PLAN

PLANTATION PLAZA
HWY 27
LEESBURG, FLORIDA

Architect of Record
John W. Burt - AR93163

Revisions:
4 10-21-21-BLDG REVIEW CHANGES

Date:	Drawn By:	Checked By:
06-05-2019	RR	JWB

Project No.
19-019

Sheet No.
A102

LAKE COUNTY BUILDING SERVICES
This document must be on jobsite for inspections.
This document was reviewed for code compliance; this does not relieve the applicant from correcting errors and omissions and complying with the current Florida Building Code.

HARBCO GENERAL CONTRACTORS, INC.

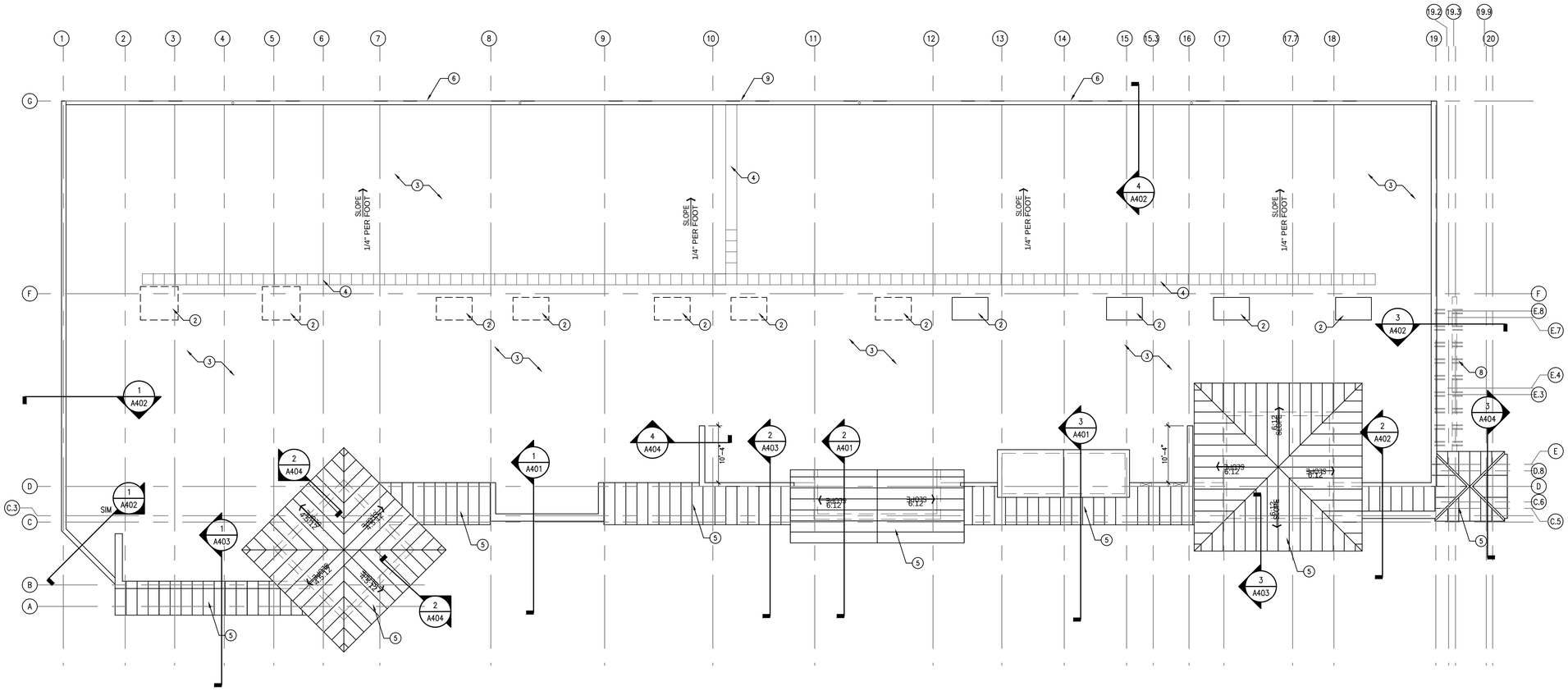

NORTH

1 A103 **ROOF PLAN**
SCALE: 3 / 32" = 1 ' - 0 "

GENERAL ROOF NOTES:

A. REFER TO THE EXTERIOR FINISH SCHEDULE FOR STANDING SEAM ROOFING TYPE.
B. INSTALL 24" (12" EACH WAY) METAL FLASHING AT ALL VALLEY CONDITIONS.
C. SEE TRUSS PLAN AND LINTEL SCHEDULE.
D. FASTENERS – SIMPLEX 1 1/2" CORROSION RESISTANT
E. METAL FLASHING – MIN. 26 GA. – G-90 CORROSION RESISTANT CONFORMS TO A 525 & ASTM A 90. LEAD FOR STACKS TO BE MINIMUM 2.5#/SQ. FT.
F. ASPHALT ADHESIVE – PLASTIC ROOF CEMENT CONFORMING TO ASTM D 4586, TYPE II,NON-ASBESTOS, NON-RUNNING, HEAVY BODY MATERIAL COMPOSED OF ASPHALT & OTHER MINERAL INGREDIENTS.
G. COORD. LOCATION OF ROOF PENETRATIONS WITH STRUCTURAL DRAWINGS PROVIDE MISC. STEEL FOR FRAMING AS NECESSARY.
H. PROVIDE TAPERED INSULATION CRICKETS AS NECESSARY IN FRONT OF EACH CURB, ETC. AS NEEDED FOR POSITIVE DRAINAGE.

ROOF PLAN NOTES:

1. TAPERED INSULATION
2. ROOF TOP UNIT (DASHED UNITS REPRESENT FUTURE UNITS)
3. ROOFING MEMBRANE – .45 TPO
4. WALK PADS
5. STANDING SEAM METAL ROOF
6. GUTTER W/ DOWNSPOUTS.
7. BACK-UP ROOF SCUPPER.
8. WOOD TRELLIS BELOW
9. ROOF ACCESS LADDER

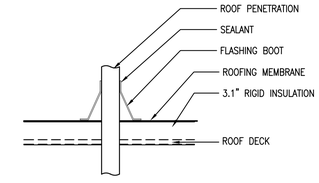

2 A103 **ROOF SECTION**
SCALE: N.T.S.

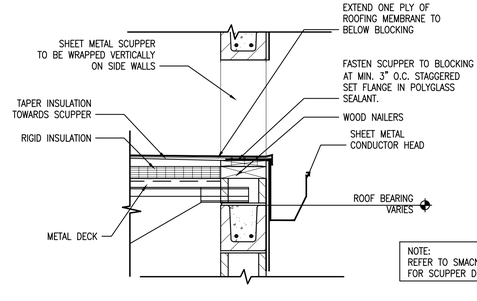

3 A103 **SCUPPER DETAIL**
SCALE: 1 " = 1 ' - 0 "

HARBCO GENERAL CONTRACTORS, INC.

LAKE COUNTY BUILDING SERVICES
This document must be on jobsite for inspections.
This document was reviewed for code compliance; this does not relieve the applicant from correcting errors and omissions and complying with the current Florida Building Code.

JWB ARCHITECTS
Lic. # AA26001266
2295 S. HIAWASSEE RD. SUITE 304
ORLANDO, FLORIDA 32835
PH:407.298-5020
FX:407.298-5030

Owner:
ALI JAWAD

ROOF PLAN

PLANTATION PLAZA
HWY 27
LEESBURG, FLORIDA

Architect of Record
John W. Burt - AR93163

Revisions:

Date:	Drawn By:	Checked By:
06-05-2019	RR	JWB

Project No.
19-019

Sheet No.
A103

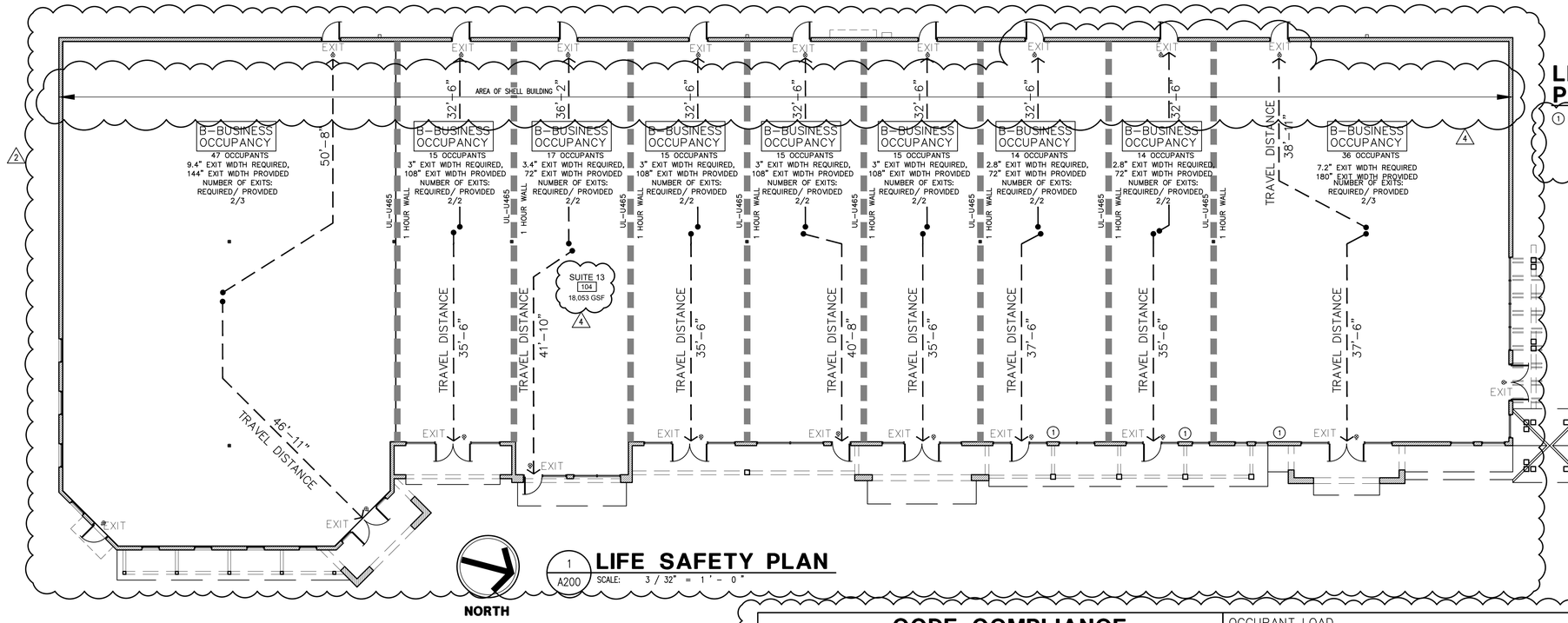

1 A200 **LIFE SAFETY PLAN**

SCALE: 3 / 32" = 1 ' - 0 "

LIFE SAFETY PLAN NOTES:

1. NOT USED.

CODE COMPLIANCE

BUILDING DATA

NUMBER OF STORIES: ONE STORY

OCCUPANCY TYPE: B – BUSINESS

CONSTRUCTION TYPE:

NEW CONSTRUCTION: TYPE IIB

STRUCTURAL FRAME	: 0 HOURS
EXTERIOR BEARING WALLS	: 0 HOURS
INTERIOR BEARING WALLS	: 0 HOURS
EXTERIOR NON–BEARING WALLS	: 0 HOURS MORE THAN 30' SEPARARTION
INTERIOR NON–BEARING WALLS	: 0 HOURS
FLOOR CONSTRUCTION	: 0 HOURS
ROOF CONSTRUCTION	: 0 HOURS

MAXIMUM ALLOWABLE HEIGHT:

4 STORIES PER TABLE 504.4, MAX OF 75 FT PER 504.3

MAXIMUM ALLOWABLE BUILDING AREA: 92,000 SQ.FT. PER TABLE 506.2

ACTUAL BUILDING AREA

1ST FLOOR	:	19,629 SQ.FT.
TOTAL	:	19,629 SQ.FT.

OCCUPANT LOAD

BUSINESS AREAS (TABLE 1004.1.2) = 1 OCCUPANT PER 100 NET SF.

TOTAL OCCUPANTS = SEE INDIVIDUAL SUITES FOR CALCULATIONS

MEANS OF EGRESS

MAXIMUM ALLOWABLE TRAVEL DISTANCE: 300 FEET FOR B OCCUPANCY PER TABLE 1017.2

MAXIMUM PROVIDED TRAVEL DISTANCE: 46'–11"

MAXIMUM ALLOWABLE DEAD END CORRIDOR LENGTH: 20 FEET – A2

EGRESS WIDTH PER PERSON SERVED: .2 INCHES

EACH SUITE SEPARATE.

RATINGS:

TENANT SEPARATIONS: 1 HOUR RATED (PER SECTION 708)

GENERAL NOTE:
THIS CODE COMPLIANCE PLAN IS NOT ISSUED SOLEY FOR THE USE OF CODE REVIEW OFFICIALS. ALL CONTRACTORS REGARDLESS OF TRADE ARE RESPONSIBLE FOR CONSTRUCTING THE BUILDING AS DESCRIBED ABOVE. THIS INCLUDES BUT IS NOT LIMITED TO FIRE DAMPERS, FIRE RATINGS ON DOORS, FIRE RATINGS ON ACCESS DOORS, DOOR CLOSERS, FIRE STOPPING AND OTHER COMMON DEVICES USED TO MAINTAIN THE REQUIRED FIRE RATING OF THE ASSEMBLY.

DESIGN NO. U465
NONBEARING WALL RATING-1 HR.

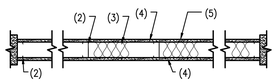

1. FLOOR AND CEILING RUNNERS – (NOT SHOWN)– CHANNEL SHAPED RUNNERS, 3–5/8 IN. WIDE (MIN), 1–1/4 IN. LEGS, FORMED FROM MIN NO. 25 MSG GALV STEEL, ATTACHED TO FLOOR AND CEILING WITH FASTENERS SPACED 24 IN OC MAX.

2. STEEL STUDS —CHANNEL SHAPED, 3–5/8 IN. WIDE (MIN), 1–1/4 IN. LEGS, 3/8 IN. FOLDED BACK RETURNS, FORMED FROM MIN NO. 25 MSG GALV STEEL SPACED 24 IN. OC MAX.

3. BATTS AND BLANKET* —(OPTIONAL) —MINERAL WOOL OR GLASS FIBER BATTS PARTIALLY OR COMPLETELY FILLING STUD CAVITY.
SEE BATTS AND BLANKETS (BZJZ) CATEGORY FOR NAMES OF CLASSIFIED COMPANIES.

3A. FIBER SPRAYED* —AS AN ALTERNATE TO BATTS AND BLANKETS (ITEM 3) — SPRAY APPLIED CELLULOSE INSULATION MATERIAL. THE FIBER IS APPLIED WITH WATER TO COMPLETELY FILL THE ENCLOSED CAVITY IN ACCORDANCE WITH THE APPLICATION INSTRUCTIONS SUPPLIED WITH THE PRODUCT. NOMINAL DRY DENSITY OF 3.0 LB/ CUBIC FT.
US GREENFIBER LLC —COCOON STABILIZED CELLULOSE INSULATION.

3B. FIBER, SPRAYED* —AS AN ALTERNATE TO BATTS AND BLANKETS (ITEM 3) AND ITEM 3A – SPRAY APPLIED CELLULOSE INSULATION MATERIAL. THE FIBER IS APPLIED WITH WATER TO INTERIOR SURFACES IN ACCORDANCE WITH THE APPLICA–TION INSTRUCTIONS SUPPLIED WITH THE PRODUCT. APPLIED TO COMPLETELY FILL THE ENCLOSED CAVITY. MINIMUM DRY DENSITY OF 4.3 POUNDS PER CUBIC FT.
NU–WOOL CO INC —CELLULOSE INSULATION

4. GYPSUM BOARD* – 5/8 IN. THICK, 4 FT WIDE, ATTACHED TO STEEL STUDS AND FLOOR AND CEILING TRACK WITH 1 IN. LONG, TYPE S STEEL SCREWS SPACED 8 IN. OC. ALONG EDGES OF BOARD AND 12 IN. OC IN THE FIELD OF THE BOARD. JOINTS ORIENTED VERTICALLY AND STAGGERED ON OPPOSITE SIDES OF THE ASSEMBLY. WHEN ATTACHED TO ITEM 6 (RESILIENT CHANNELS) OR 6A (FURRING CHANNELS), WALLBOARD IS SCREW ATTACHED TO FURRING CHANNELS WITH 1 IN. LONG, TYPE S STEEL SCREWS SPACED 12 IN. OC.
AMERICAN GYPSUM CO – TYPES AG–C, AGX–1, AGX–7.
BEINING NEW BUILDING MATERIALS CO LTD – TYPE DSX–1.
BPB AMERICA INC – TYPES 1, EGRG, PROROC TYPE X, PROROC TYPE C.
BPB CANADA INC – PROROC TYPE C, PROROC TYPE X OR PROROC TYPE ABUSE– RESISTANT.
CANADIAN GYPSUM COMPANY – TYPES AR, C, IP–AR, IP–X1, IP–X2, IPC–AR, SCX, SHX, WRC OR WRX.
G–P GYPSUM CORP, SUB OF GEORGIA–PACIFIC CORP – TYPES 5, 9, C, DAP,DD,DA, DGG, DS, GPFS6.
LAFARGE NORTH AMERICA INC – TYPES LGFC2, LGFC2A, LGFC6, LGFC6A, LGFC–C, LGFC–C/A.
NATIONAL GYPSUM CO – TYPES FSK, FSK–C, FSK–G, FSW–C, FSW–G FSW, FSW–3, FSW–5.
PABCO GYPSUM, DIV OF PACIFIC COAST BUILDING PRODUCTS INC – TYPE PG–C OR PG–9
PANEL REY S A – TYPE PRX
SIAM GYPSUM INDUSTRY (SARABURI) CO LTD – TYPE EX–1.
STANDARD GYPSUM L L C – TYPE SG–C.
TEMPLE–INLAND FOREST PRODUCTS CORP – TYPE TG–C
UNITED STATES GYPSUM CO – TYPE AR, C, FRX–G, IP–AR, IP–X1, IP–X2, IPC–AR, SCX, SHX, WRC OR WRX.
USG MEXICO S A DE C V – TYPE AR, C, IP–AR, IP–X1, IP–X2 IPC–AR, SCX, SHX, WRC OR WRX.

4A. GYPSUM BOARD* – (AS ALTERNATETO ITEM 4) – NOM 5/8 IN. THICK GYPSUM PANELS WITH BEVELED, SQUARE OR TAPERED EDGES, APPLIED VERTICALLY OR HORIZONTALLY. VERTICAL JOINTS CENTERED OVER STUDS AND STAGGERED ONE STUD CAVITY ON OPPOSITE SIDES OF STUDS. HORIZONTAL EDGE JOINTS AND HORIZONTAL BUTT JOINTS ON OPPOSITE SIDES OF STUDS NEED NOT BE STAGGERED OR BACKED. PANELS ATTACHED TO STEEL STUDS AND FLOOR RUNNER WITH 1 IN. LONG TYPE S STEEL SCREWS SPACED 8 IN. OC WHEN APPLIED HORIZONTALLY, 8 IN. OC ALONG VERTICAL AND BOTTOM EDGES AND 12 IN. OC IN THE FIELD WHEN PANELS ARE APPLIED VERTICALLY.
CANADIAN GYPSUM COMPANY – TYPES AR, C, IP–AR, IP–X1, IP–X2, IPC–AR, SCX, SHX, WRC OR WRX.
UNITED STATES GYPSUM CO – TYPE AR, C, FRX–G, IP–AR, IP–X1, IP–X2, IPC–AR, SCX, SHX, WRC OR WRX.
USG MEXICO S A DE C V – TYPE AR, C, IP–AR, IP–X1, IP–X2, IPC–AR, SCX, SHX, WRC OR WRX.

4B. GYPSUM BOARD* – (AS AN ALTERNATE TO ITEMS 4 OR 4A) – NOM 3/4 IN. THICK, 4 FT WIDE, INSTALLED AS DESCRIBED IN ITEM 4A WITH SCREW LENGTH INCREASED TO 1–1/3 IN.
CANADIAN GYPSUM COMPANY – TYPES AR, IP–AR.
UNITED STATES GYPSUM CO – TYPES AR, IP–AR.
USG MEXICO S A DE C V – TYPES AR, IP–AR.

5. JOINT TAPE AND COMPOUND – VINYL, DRY OR PREMIXED JOINT COMPOUND, APPLIED IN TWO COATS TO JOINTS AND SCREW HEADS; PAPER TAPE, 2 IN. WIDE, EMBEDDED IN FIRST LAYER OF COMPOUND OVER ALL JOINTS. AS AN ALTERNATE, NOMINAL 3/32 IN. THICK GYPSUM VENEER PLASTER MAY BE APPLIED TO THE ENTIRE SURFACE OF CLASSIFIED VENEER BASEBOARD. JOINTS REINFORCED.

6. RESILIENT CHANNEL – (OPTIONAL– NOT SHOWN) – 25 MSG GALV STEEL RESILIENT CHANNELS SPACED VERTICALLY MAX 24 IN. OC, FLANGE PORTION ATTACHED TO EACH INTERSECTING STUD WITH 1/2 IN. LONG TYPE S–12 PANHEAD STEEL SCREWS.

6A. STEEL FRAMING MEMBERS (NOT SHOWN)* – AS AN ALTERNATE TO ITEM 3, FURRING CHANNELS AND RESILIENT SOUND ISOLATION CLIP AS DESCRIBED BELOW:

FURRING CHANNELS – FORMED OF NO. 25 MSG GALV STEEL 2–3/8 IN. WIDE BY 7/8 IN. DEEP, SPACED 24 IN. OC PERPENDICULAR TO STUDS. CHANNELS SECURED TO STUDS AS DESCRIBED IN ITEM B. ENDS OF ADJOINING CHANNELS ARE OVERLAPPED 6 IN. AND TIED TOGETHER WITH DOUBLE STRAND OF NO. 18 SWG GALV STEEL WIRE NEAR EACH END OF OVERLAP. AS AN ALTERNATE, ENDS OF ADJOINING CHANNELS MAY BE OVERLAPPED 6 IN. AND SECURED TOGETHER WITH TWO SELF–TAPPING #6 FRAMING SCREWS, MIN. 7/16 IN. LONG AT THE MIDPOINT OF THE OVER–LAP, WITH ONE SCREW ON EACH FLANGE OF THE CHANNEL.

STEEL FRAMING MEMBERS* – USED TO ATTACH FURRING CHANNELS (ITEM A) TO STUDS (ITEM 1). CLIPS SPACED 48 IN. OC., AND SECURED TO STUDS WITH 1–5/8 IN. WAFER OR HEX HEAD TYPE S STEEL SCREW THROUGH THE CENTER GROMMET. FURRING CHANNELS ARE FRICTION FITTED INTO CLIPS.
PAC INTERNATIONAL INC – TYPE RSIC–1

*BEARING THE UL CLASSIFICATION MARK

DESIGN NO. W-L1001
RATED PENETRATION DETAIL

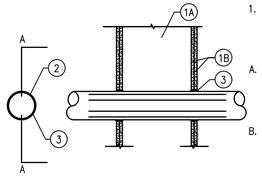

WHEN COPPER PIPE IS USED, T RATING IS 0.H, MINNESOYA MINING & MFG CO–CP 25WB
*BEARING THE UL CLASSICIFICATION MAKING

F RATINGS– 1,2,3 AND 4 HR (SEE ITEMS 2 AND 3)
T RATINGS– 0,1,2,3, AND 4 HR (SEE ITEM 3)
L RATING AT AMBIENT– LESS THAN 1 CFM/SQ. FT.
L RATING AT 400 F– LESS THAN 1 CFM/SQ. FT.

1. WALL ASSEMBLY THE 1,2,3 OR 4 HR FIRE–RATED GYPSUM WALLBOARD/ STUD WALL ASSEMBLY SHALL BE CONSTRUCTED OF THE MATERIALS AND IN THE MANNER DESCRIBED IN THE INDIVIDUAL U300 OR U400 SERIES WALL OR PARTITION DESIGNS IN THE UL FIRE RESISTANCE DIRECTORY AND SHALL INCLUDE THE FOLLOWING CONSTRUCTION FEATURES:

A. STUDS WALL FRAMING MAY CONSIST OF EITHER WOOD STUDS (MAY 2 H FIRE RATED ASSEMBLIES) OR STEEL CHANNEL STUDS. WOOD STUDS TO CONSIST OF NOM 2 BY 4 IN. LUMBER SPACED 16 IN. O.C. WITH NOM 2 BY 4 IN. LUMBER END PLATES AND CROSS BRACES. STEEL STUDS TO BE MIN 3–5/8 IN. WIDE BY 1–3/8 IN. DEEP CHANNELS SPACED MAX 24 IN. O.C.
A.

B. GYPSUM BOARD* NOM 1/2 OR 5/8 IN. THICK. 4 FT. WIDE WITH SQUARE OR TAPERED EDGES. THE GYPSUM WALBOARD TYPE, THICKNESS, NUMBER OF LAYERS, FASTENER TYPE AND SHEET ORIENTATION SHALL BE AS SPECIFIED IN THE INDIVIDUAL U300 OR U400 SERIES DESIGN IN THE UL FIRE RESISTANCE DIRECTORY. MAX DIAM. OF OPENING IS 13–1/2 IN.

2. PIPE OR CONDUIT NOM 12 IN. DIAM. (OR SMALLER) SCHEDULE 10 (OR HEAVIER) STEEL PIPE, NOM 12 IN. DIAM. (OR SMALLER) SERVICE WEIGHT (OR HEAVIER) CAST IRON SOIL PIPE, NOM 12 IN. DIAM. (OR SMALLER) CLASS 50 (OR HEAVIER) DUCTILE IRON PRESSURE PIPE, NOM 6 IN. DIAM. (OR SMALLER) STEEL CONDUIT, NOM 4 IN. DIAM. (OR SMALLER) STEEL ELECTRICAL METALLIC TUBING, NOM 6 IN. DIAM. (OR SMALLER) TYPE L OR (OR HEAVIER) COPPER TUBING OR NOM 1 IN. DIAM. (OR SMALLER) FLEXIBLE STEEL CONDUIT . WHEN COPPER PIPE IS USED. MAX F RATING OF FIRESTOP SYSTEM (ITEM 3) IS 2 H. STEEL PIPES OR CONDUITS LARGER THAN NOM 4 IN. DIAM. MAY ONLY BE USED IN WALLS CONSTRUCTED USING STEEL, CHANNEL STUDS. A MAX OF ONE PIPE OR CONDUIT IS PERMITTED IN THE FIRESTOP SYSTEM. PIPE OR CONDUIT TO BE INSTALLED NEAR CENTER OF STUD CAVITY WIDTH AND TO BE RIGIDLY SUPPORTED ON BOTH SIDES OF WALL ASSEMBLY.

3. FILL, VOID OR CAVITY MATERIAL* CAULK FILL MATERIAL INSTALLED TO COMPLETELY FILL ANNULAR SPACE BETWEEN PIPE OR CONDUIT AND GYPSUM WALLBOARD AND WITH A MIN 1/4 IN. DIAM. BEAD OF CAULK APPLIED TO PERIMETEROF PIPE OR CONDUIT AT ITS EGRESS FROM THE WALL. CAULK INSTALLED SYMMETRICALLY ON BOTH SIDES OF WALL ASSEMBLY. THE HOURLY F RATING OF THE FIRESTOP SYSTEM IS DEPENDENT UPON THE TYPE OR SIZE OF THE INSTALLED. AS TABULATED BELOW: MAX PIPE OR CONDUIT DIAM. IN. ANNULAR SPACE IN F RATING HR T RATING HR 1 0 TO 3/16 1 OR 2 0+, 1 OR 2 1 1/4 TO 1/2 S OR 4 3 OR + 4 0 TO 1–1/2 1 OR 2 0 6 1/4 TO 1/2 S OR +0 12 3/16 TO 3/8 1 OR 2 0

HARRIS GENERAL CONTRACTING

LAKE COUNTY BUILDING SERVICES
This document must be on jobsite for inspections.
This document was reviewed for code compliance; this does not relieve the applicant from correcting errors and omissions and complying with the current Florida Building Code.

JWB ARCHITECTS
LIC. # AA26001286
2295 S. HIAWASSEE RD. SUITE 304
ORLANDO, FLORIDA 32835
PH:407.298-5020
FX:407.298-5030

Owner:
ALI JAWAD

LIFE SAFETY PLAN
PLANTATION PLAZA
HWY 27
LEESBURG, FLORIDA

Architect of Record
John W. Burt – AR93163

Revisions:

1	11-01-19-BLDG REVIEW CHANGES
2	03-18-21-BLDG REVIEW CHANGES
4	10-21-21-BLDG REVIEW CHANGES

Date:	Drawn By:	Checked By:
06-05-2019	RR	JWB

Project No.
19-019

Sheet No.
A200

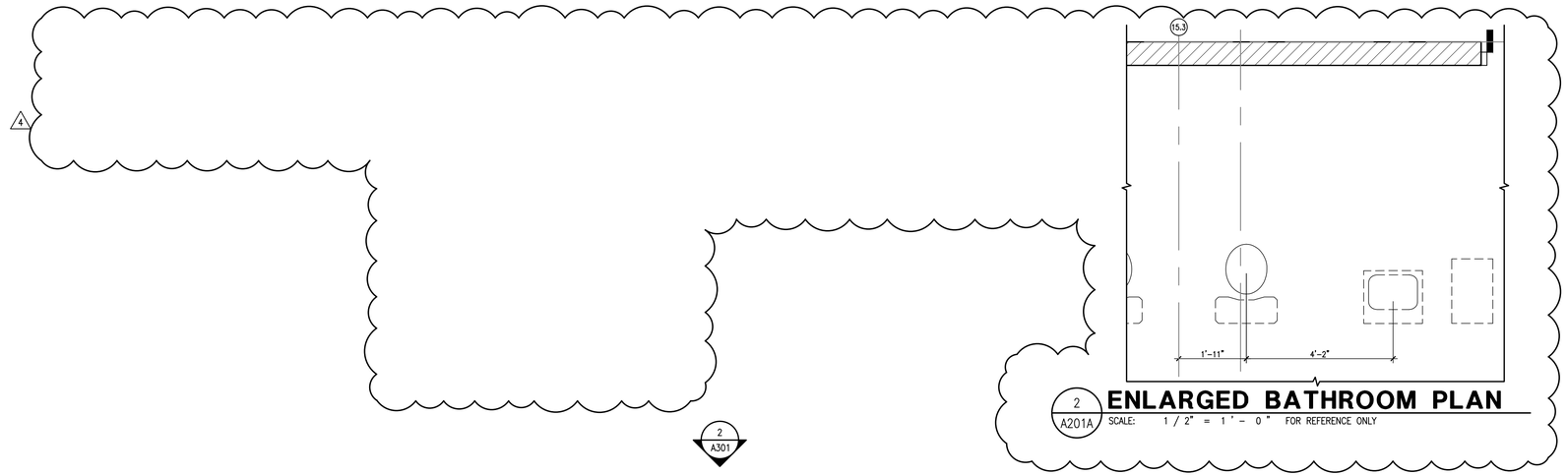

2 A201A — **ENLARGED BATHROOM PLAN**
SCALE: 1 / 2" = 1 ' - 0 " FOR REFERENCE ONLY

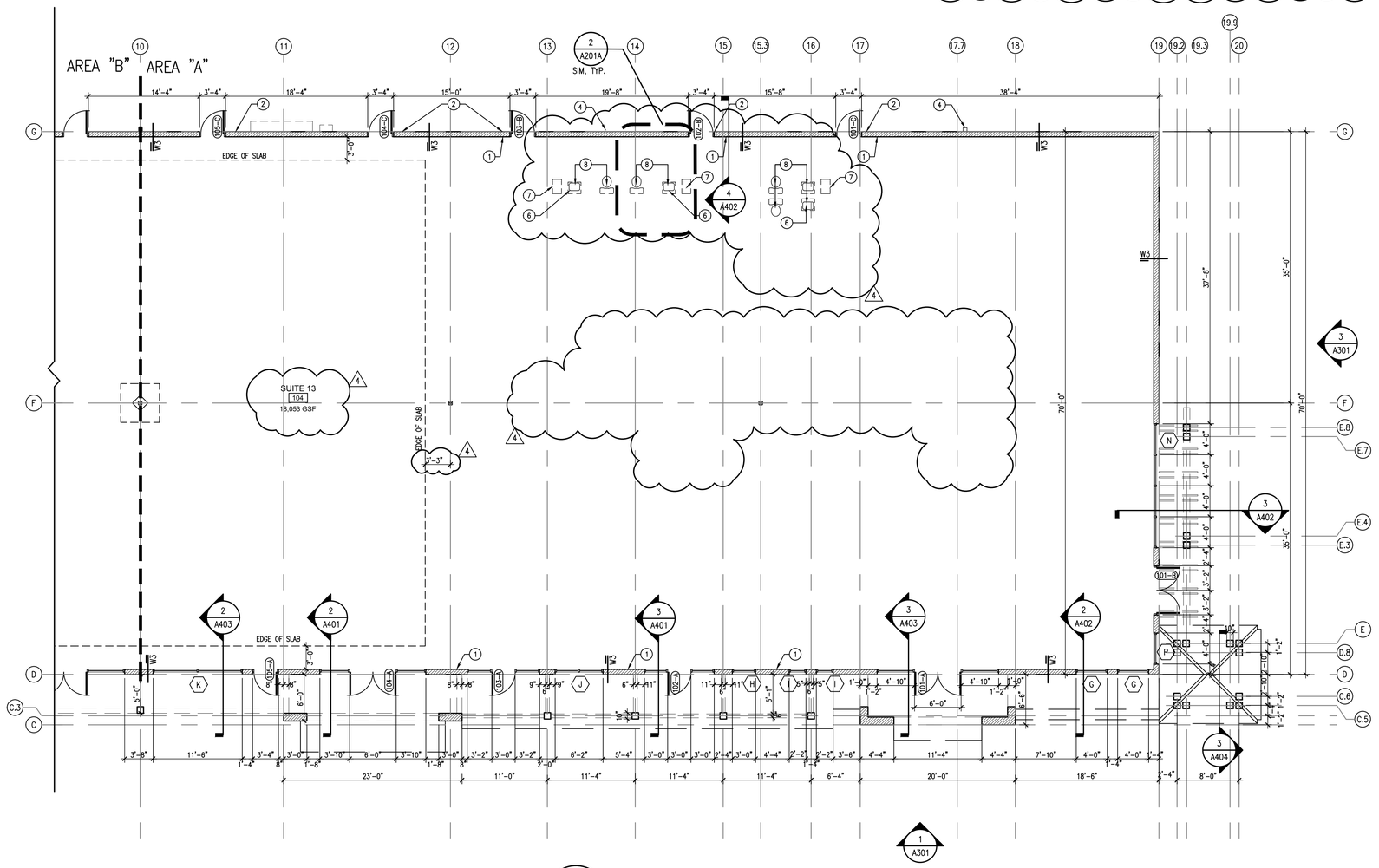

1 A201A — **MAIN FLOOR PLAN - AREA A**
SCALE: 1 / 8" = 1 ' - 0 "

NORTH

GENERAL NOTES:

A. ALL DIMENSIONS ARE FROM FACE OF STUD, OR FACE OF MASONRY, OR FACE OF CONCRETE WALL. ANY DIMENSIONS NOT SHOWN OR DEEMED QUESTIONABLE ARE TO BE VERIFIED BY ARCHITECT/DESIGNER. DO NOT SCALE DRAWINGS.

B. PROVIDE BLOCKING SUPPORTS AS REQUIRED FOR ALL SURFACE MOUNTED ITEMS.

C. COORDINATE WORK OF THIS TRADE WITH OTHER TRADES.

D. PROVIDE MISCELLANEOUS SUPPORT FOR ALL CEILING SUSPENDED ITEMS.

E. APPLY SEALANT AT ALL JUNCTURES BETWEEN DIFFERENT MATERIALS (I.E. WINDOWS AND CAST STONE).

F. APPLY SEALANT AT ALL PLUMBING FIXTURES AT JUNCTURE WITH WALL.

PLAN NOTES:

1. SEMI-RECESSED CABINET WITH FIRE EXTINGUISHER.
2. KNOX BOX @ +8'-0" A.F.F.
3. NOT USED
4. 6x6 ALUMINUM DOWNSPOUT
5. NOT USED
6. INSTA-HOT WATER HEATER LOCATED UNDER SINK. SEE PLUMBING.
7. ELECTRIC WATER COOLER. SEE PLUMBING.
8. PLUMBING FIXTURES.

NOTE: ALL INDICATIONS TO PLUMBING AND ELECTRICAL FIXTURES ARE FOR REFERENCE ONLY.

WALL TYPES

NOTES: 1 - SEE REFLECTED CEILING PLANS FOR CONSTRUCTED WALL HEIGHT
2 - PROVIDE MOISTURE RESISTANT GYPSUM WALLBOARD ON ALL WET AREA WALLS
3 - SEE WALL SECTIONS FOR EXTERIOR WALL CONFIGURATION

W1 3 5/8" 25 GAUGE METAL TRACK
W/ 3 1/2" METAL STUDS @ 24"O.C.
AND 5/8" GYPSUM WALL BOARD EACH SIDE
& (1) LAYER OF SOUND ATTENUATION
BLANKETS IN EACH STUD CAVITY.
4 7/8"

W2 5 5/8" 25 GAUGE METAL TRACK
W/ 5 1/2" METAL STUDS @ 24"O.C.
WITH 5/8" GYPSUM WALL BOARD EACH SIDE
& (1) LAYER OF SOUND ATTENUATION
BLANKETS IN EACH STUD CAVITY.
6 7/8"

W3 8x8x16" CMU BLOCK WALL
3/4" STUCCO CEMENT FINISH (EXTERIOR SIDE)
3/4" R-3 MIN. RIGID INSULATION BOARD
3/4" TREATED WOOD FURRING STRIPS
1/2" GYPSUM WALL BOARD
(INTERIOR SIDE) (SEE FINISHES)
10 3/8"

W4 5 5/8" 25 GAUGE METAL TRACK
W/ 5 1/2" METAL STUDS @ 24"O.C.
WITH 5/8" GYPSUM WALL BOARD EACH SIDE
& (1) LAYER OF SOUND ATTENUATION
BLANKETS IN EACH STUD CAVITY.
1 HR MIN. FIRE RATED WALL
6 7/8"
U.L. U465

LEGEND:

- PLAN NOTE
- DOOR LABEL
- WINDOW LABEL-SEE A501 FOR ELEVATIONS
- SUITE — ROOM NAME
- X / AXXX — ELEVATION
- X / AXXX — SECTION

LAKE COUNTY BUILDING SERVICES
This document must be on jobsite for inspections.
This document was reviewed for code compliance; this does not relieve the applicant from correcting errors and omissions and complying with the current Florida Building Code.

AREA A

KEYPLAN

HARBCO GENERAL CONTRACTORS, INC.

JWB ARCHITECTS
LIC. # AA26001265
2295 S. HIAWASSEE RD.
SUITE 304
ORLANDO, FLORIDA 32835
PH:407.298-5020
FX:407.298-5030

Owner:
ALI JAWAD

MAIN FLOOR PLAN - AREA A

PLANTATION PLAZA
HWY 27
LEESBURG, FLORIDA

Architect of Record
John W. Burt - AR93163

Revisions:
1 — 11-01-19-BLDG REVIEW CHANGES
2 — 03-18-21-BLDG REVIEW CHANGES
4 — 10-21-21-BLDG REVIEW CHANGES

Date:	Drawn By:	Checked By:
06-05-2019	RR	JWB

Project No.
19-019

Sheet No.
A201A

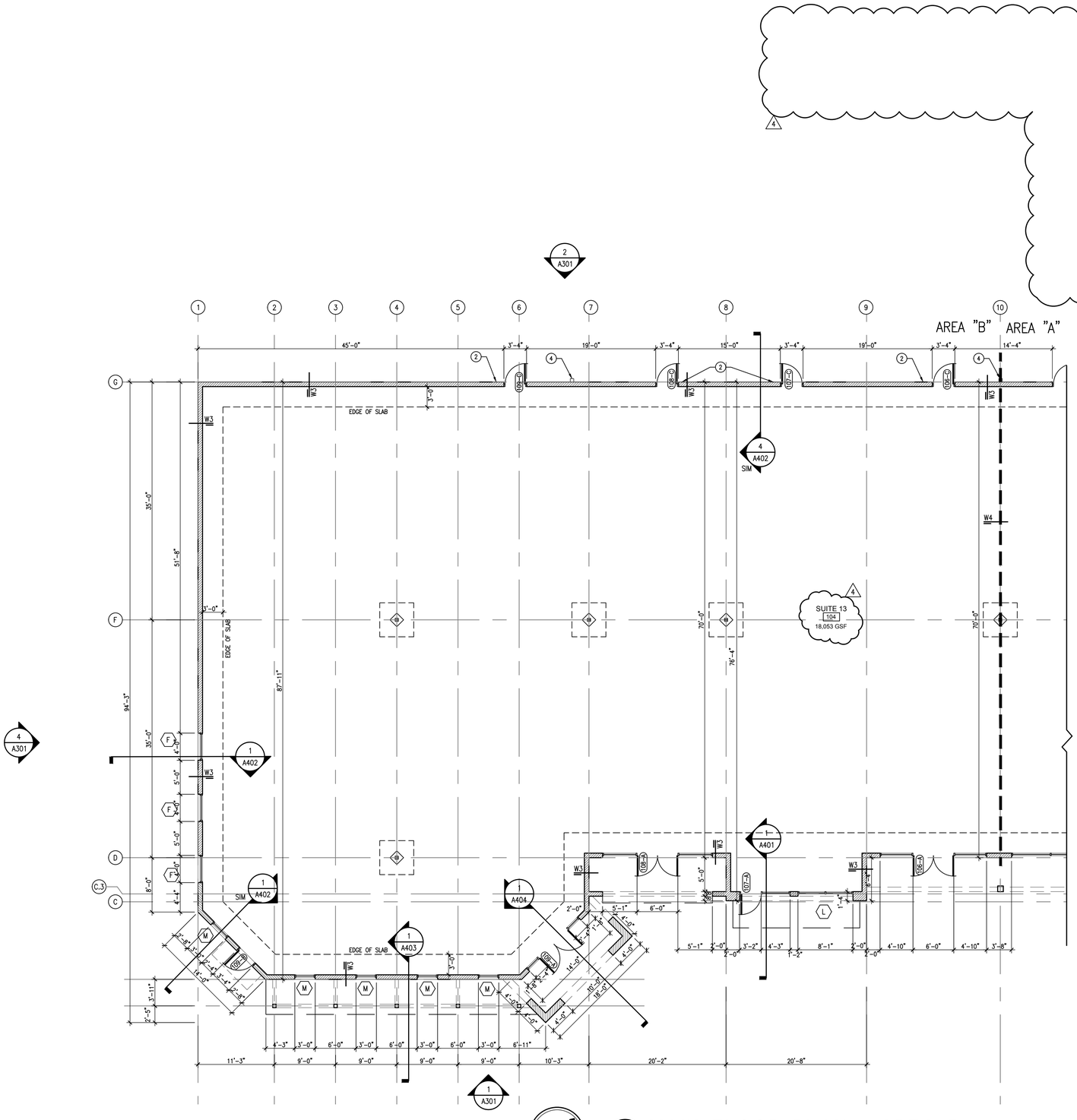

1 A201A SCALE: 1/8" = 1'-0"

MAIN FLOOR PLAN - AREA B

GENERAL NOTES:

A. ALL DIMENSIONS ARE FROM FACE OF STUD, OR FACE OF MASONRY, OR FACE OF CONCRETE WALL. ANY DIMENSIONS NOT SHOWN OR DEEMED QUESTIONABLE ARE TO BE VERIFIED BY ARCHITECT/DESIGNER. DO NOT SCALE DRAWINGS.

B. PROVIDE BLOCKING SUPPORTS AS REQUIRED FOR ALL SURFACE MOUNTED ITEMS.

C. COORDINATE WORK OF THIS TRADE WITH OTHER TRADES.

D. PROVIDE MISCELLANEOUS SUPPORT FOR ALL CEILING SUSPENDED ITEMS.

E. APPLY SEALANT AT ALL JUNCTURES BETWEEN DIFFERENT MATERIALS (I.E. WINDOWS AND CAST STONE).

F. APPLY SEALANT AT ALL PLUMBING FIXTURES AT JUNCTURE WITH WALL.

PLAN NOTES:

1. SEMI-RECESSED CABINET WITH FIRE EXTINGUISHER.
2. KNOX BOX @ +8'-0" A.F.F.
3. NOT USED
4. 6x6 ALUMINUM DOWNSPOUT
5. NOT USED
6. INSTA-HOT WATER HEATER LOCATED UNDER SINK. SEE PLUMBING.
7. ELECTRIC WATER COOLER. SEE PLUMBING.
8. PLUMBING FIXTURES.

NOTE: ALL INDICATIONS TO PLUMBING AND ELECTRICAL FIXTURES ARE FOR REFERENCE ONLY.

WALL TYPES

NOTES: 1 - SEE REFLECTED CEILING PLANS FOR CONSTRUCTED WALL HEIGHT
2 - PROVIDE MOISTURE RESISTANT GYPSUM WALLBOARD ON ALL WET AREA WALLS
3 - SEE WALL SECTIONS FOR EXTERIOR WALL CONFIGURATION

W1 3 5/8" 25 GAUGE METAL TRACK
W/ 3 1/2" METAL STUDS @ 24"O.C.
AND 5/8" GYPSUM WALL BOARD EACH SIDE
& (1) LAYER OF SOUND ATTENUATION
BLANKETS IN EACH STUD CAVITY. — 4 7/8"

W2 5 5/8" 25 GAUGE METAL TRACK
W/ 5 1/2" METAL STUDS @ 24"O.C.
WITH 5/8" GYPSUM WALL BOARD EACH SIDE
& (1) LAYER OF SOUND ATTENUATION
BLANKETS IN EACH STUD CAVITY. — 6 7/8"

W3 8x8x16" CMU BLOCK WALL
3/4" STUCCO CEMENT FINISH (EXTERIOR SIDE)
3/4" R-3 MIN. RIGID INSULATION BOARD
3/4" TREATED WOOD FURRING STRIPS
1/2" GYPSUM WALL BOARD
(INTERIOR SIDE) (SEE FINISHES) — 10 3/8"

W4 5 5/8" 25 GAUGE METAL TRACK
W/ 5 1/2" METAL STUDS @ 24"O.C.
WITH 5/8" GYPSUM WALL BOARD EACH SIDE
& (1) LAYER OF SOUND ATTENUATION
BLANKETS IN EACH STUD CAVITY.
1 HR MIN. FIRE RATED WALL — 6 7/8" U.L. U465

LEGEND:

- PLAN NOTE
- DOOR LABEL
- WINDOW LABEL-SEE A501 FOR ELEVATIONS
- SUITE ROOM NAME
- X / AXXX ELEVATION
- X / AXXX SECTION

LAKE COUNTY BUILDING SERVICES
This document must be on jobsite for inspections.
This document was reviewed for code compliance; this does not relieve the applicant from correcting errors and omissions and complying with the current Florida Building Code.

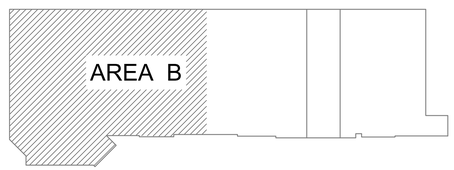

KEYPLAN

JWB ARCHITECTS
LIC. # AA26001265
2295 S. HIAWASSEE RD.
SUITE 304
ORLANDO, FLORIDA 32835
PH:407.298-5020
FX:407.298-5030

Owner:
ALI JAWAD

PLANTATION PLAZA
HWY 27
LEESBURG, FLORIDA

MAIN FLOOR PLAN - AREA B

Architect of Record
John W. Burt - AR93163

Revisions:
4 10-21-21-BLDG REVIEW CHANGES

Date:	Drawn By:	Checked By:
06-05-2019	RR	JWB

Project No.
19-019

Sheet No.
A201B

HARBCO GENERAL CONTRACTORS, INC.

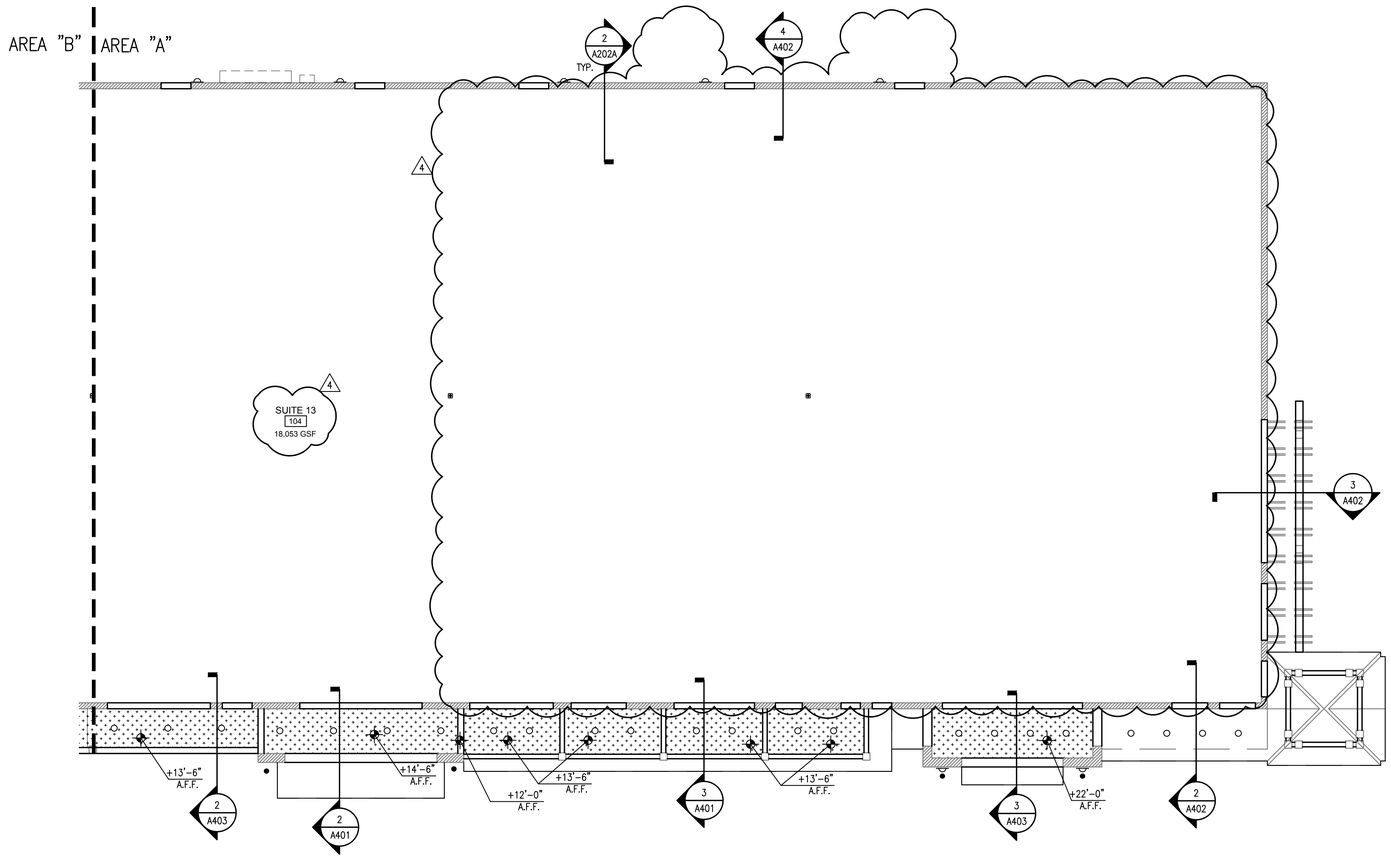

NORTH

1 / A202A **REFLECTED CEILING PLAN - AREA A**

SCALE: 1 / 8 = 1 ' - 0 "

GEN. CEILING NOTES:

1. ALL WALLS EXTEND TO ROOF DECK, U.N.O.
2. LIGHTS & DIFFUSERS ON DRAWINGS ARE FOR LOCATION ONLY. COORDINATE WITH MECHANICAL & ELECTRICAL DRAWINGS FOR EXACT SPECIFICATIONS AND VERIFICATION OF QUANTITY.
3. ALL CEILINGS ARE TO BE INSTALLED AT +10-0" A.F.F. UNLESS NOTED OTHERWISE.
4. CENTER ACCOUSTICAL CEILING PANELS IN EACH DIRECTION WITHIN THE MAIN PORTION OF ANY ROOM OR SPACE. UNLESS NOTED OTHERWISE.
5. CJ = CONTROL JOINT, SEE PLAN.

CEILING LEGEND:

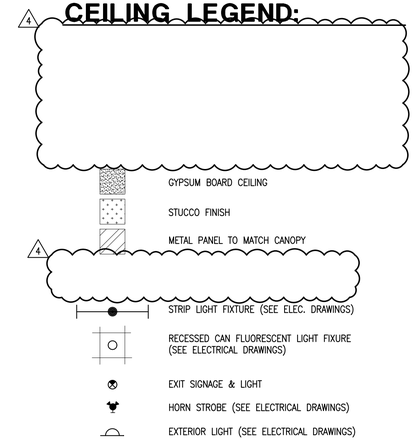

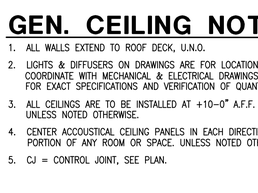

2 / A202A **CEILING DETAIL**

SCALE: 1 " = 1 ' - 0 "

LAKE COUNTY BUILDING SERVICES

This document must be on jobsite for inspections.

This document was reviewed for code compliance; this does not relieve the applicant from correcting errors and omissions and complying with the current Florida Building Code.

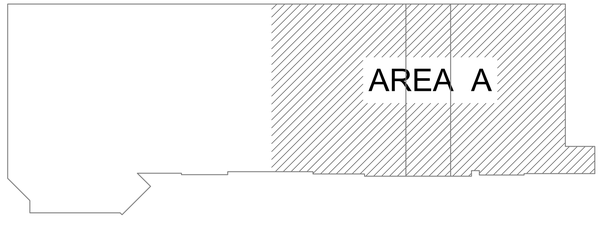

KEYPLAN

HARBCO
GENERAL CONTRACTORS, INC.

JWB ARCHITECTS
LIC. # AA26001266
2295 S. HIAWASSEE RD.
SUITE 304
ORLANDO, FLORIDA 32835
PH:407.298-5020
FX:407.298-5030

Owner:

ALI JAWAD

REFLECTED CEILING PLAN - AREA A

PLANTATION PLAZA

HWY 27
LEESBURG, FLORIDA

Architect of Record
John W. Burt - AR93163

Revisions:

4 10-21-21-BLDG REVIEW CHANGES

Date:	Drawn By:	Checked By:
06-05-2019	RR	JWB

Project No.
19-019

Sheet No.
A202A

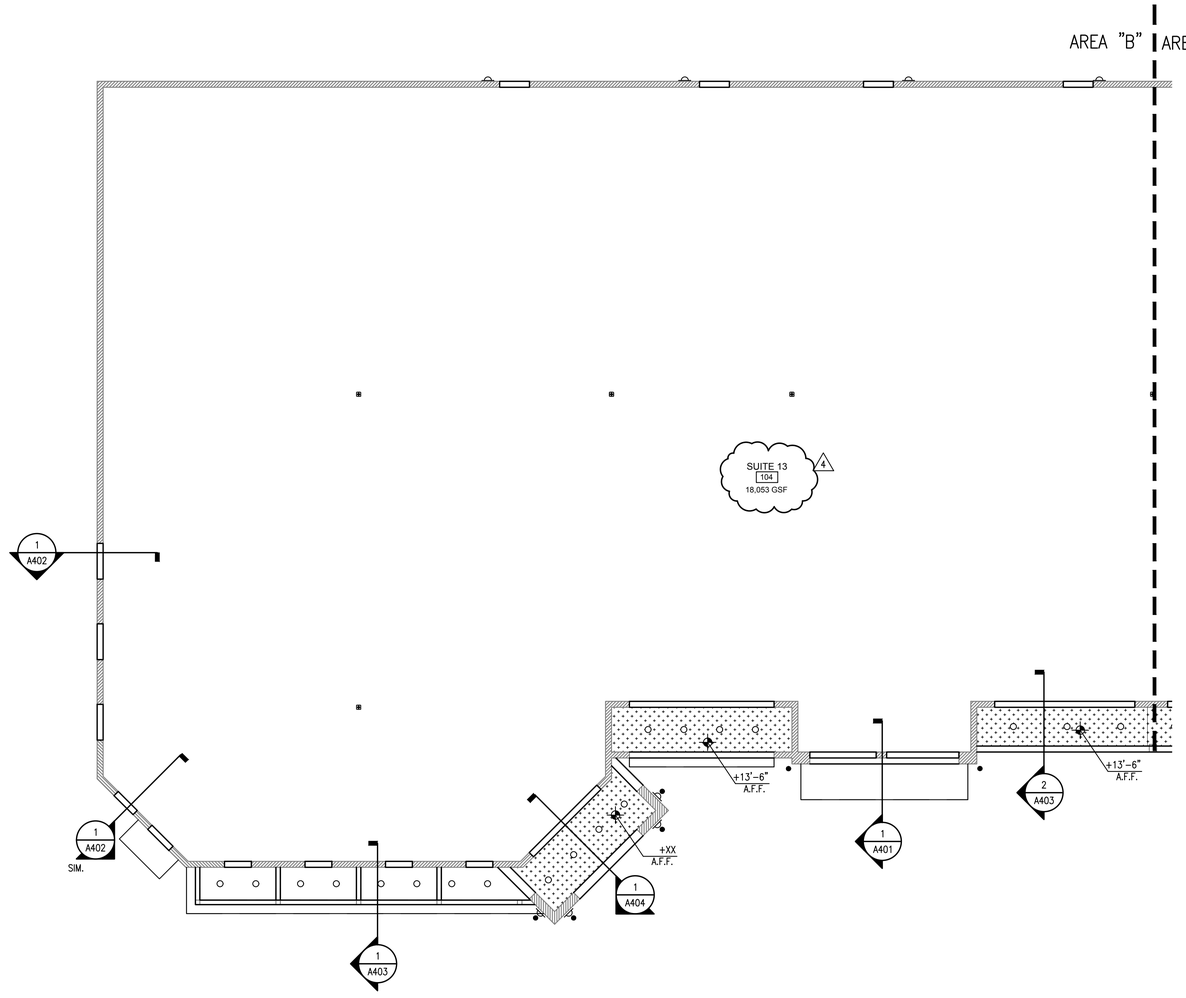

NORTH

1 A202B **REFLECTED CEILING PLAN - AREA B**

SCALE: 1/8 = 1'-0"

GEN. CEILING NOTES:

1. ALL WALLS EXTEND TO ROOF DECK, U.N.O.
2. LIGHTS & DIFFUSERS ON DRAWINGS ARE FOR LOCATION ONLY. COORDINATE WITH MECHANICAL & ELECTRICAL DRAWINGS FOR EXACT SPECIFICATIONS AND VERIFICATION OF QUANTITY.
3. ALL CEILINGS ARE TO BE INSTALLED AT +10'-0" A.F.F. UNLESS NOTED OTHERWISE.
4. CENTER ACCOUSTICAL CEILING PANELS IN EACH DIRECTION WITHIN THE MAIN PORTION OF ANY ROOM OR SPACE, UNLESS NOTED OTHERWISE.
5. CJ = CONTROL JOINT, SEE PLAN.

CEILING LEGEND:

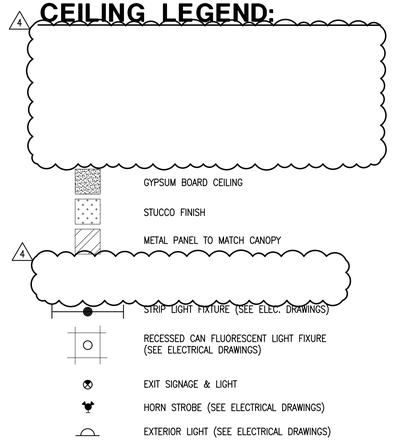

LAKE COUNTY BUILDING SERVICES
This document must be on jobsite for inspections.
This document was reviewed for code compliance; this does not relieve the applicant from correcting errors and omissions and complying with the current Florida Building Code.

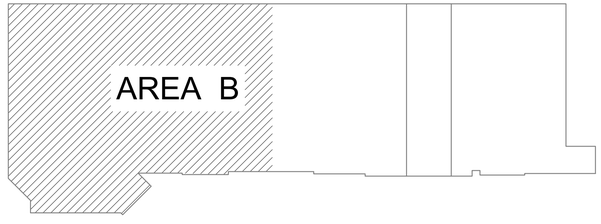

KEYPLAN

HARBCO
GENERAL CONTRACTORS, INC.

JWB ARCHITECTS
LIC. # AA26001266
2295 S. HIAWASSEE RD.
SUITE 304
ORLANDO, FLORIDA 32835
PH:407.298-5020
FX:407.298-5030

Owner:
ALI JAWAD

REFLECTED CEILING PLAN - AREA B

PLANTATION PLAZA
HWY 27
LEESBURG, FLORIDA

Architect of Record
John W. Burt - AR93163

Revisions:
4 10-21-21-BLDG REVIEW CHANGES

Date:	Drawn By:	Checked By:
06-05-2019	RR	JWB

Project No.
19-019

Sheet No.
A202B

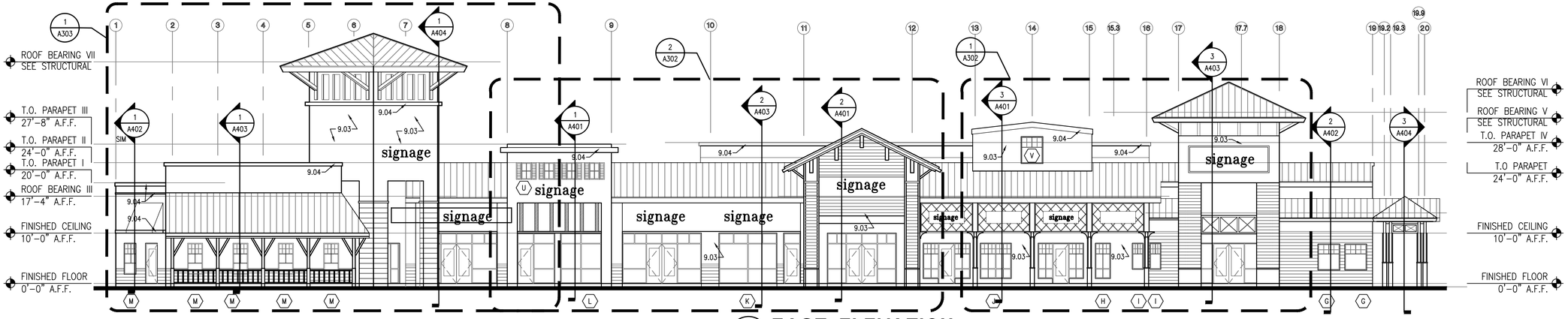

1 A301 EAST ELEVATION

SCALE: 3 / 32" = 1 ' - 0 "

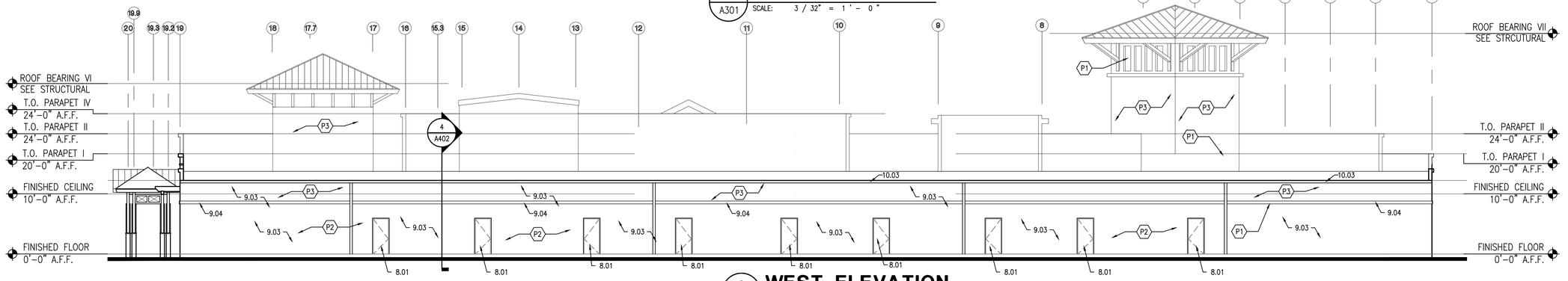

2 A301 WEST ELEVATION

SCALE: 3 / 32" = 1 ' - 0 "

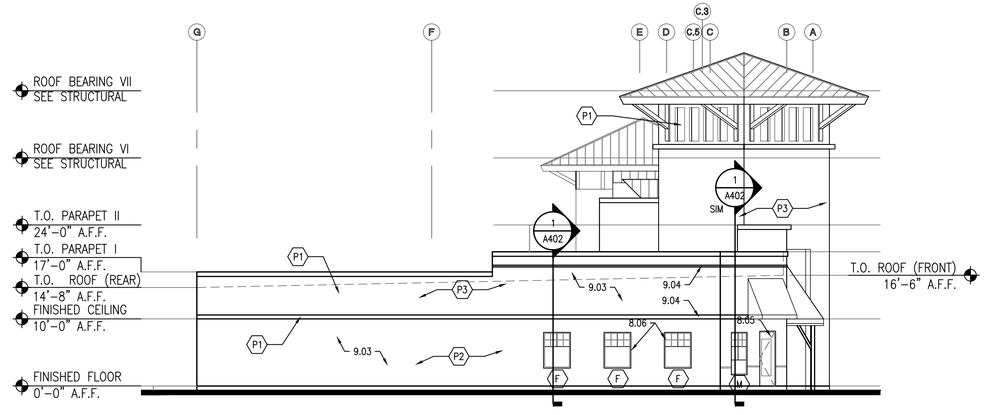

4 A301 SOUTH ELEVATION

SCALE: 3 / 32" = 1 ' - 0 "

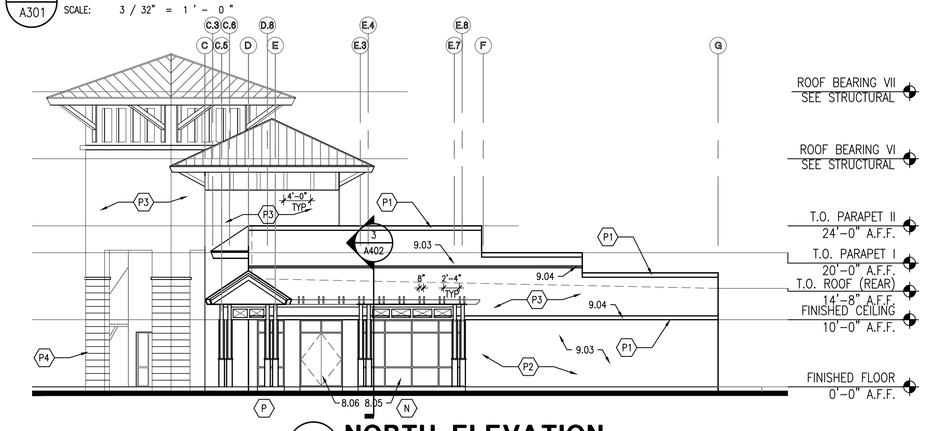

3 A301 NORTH ELEVATION

SCALE: 3 / 32" = 1 ' - 0 "

KEYNOTES

DIVISION 1 – GENERAL REQUIREMENTS

1.1 THESE GENERAL KEYNOTES ARE ORGANIZED BASE UPON 16 DIVISIONS SET UP BY THE CONSTRUCTION SPECIFICATIONS INSTITUTE.

DIVISION 2 – SITEWORK

2.01 FINISH GRADE.
2.02 TREATED COMPACTED FILL.
2.03 CONCRETE APRON OR WALKWAY. SLOPE 1/4"=1'-0"

DIVISION 3 – CONCRETE

3.01 CONCRETE SLAB. SEE STRUCTURAL.
3.02 CONCRETE FOOTING. SEE STRUCTURAL.
3.03 HORIZONTAL REBAR. SEE STRUCTURAL.
3.04 CONCRETE DECK. SEE STRUCTURAL.
3.05 VERT. REBAR. SEE STRUCTURAL.
3.06 CONCRETE FILLED BLOCK VERTICAL CELLS. SEE STRUCTURAL.

DIVISION 4 – MASONRY

4.01 8"X8"X16" NORMAL WEIGHT C.M.U.
4.02 8X8X16 NORMAL WEIGHT C.M.U. BOND BEAM, SEE STRUCTURAL.
4.03 EXTRUDED PRECAST CONCRETE SILL.
4.04 EXTRUDED PRECAST CONCRETE LINTEL. SEE STRUCTURAL.
4.05 12X8X16 NORMAL WEIGHT C.M.U.
4.06 PRE-CAST CONCRETE CAP W/ 1/2"x4' S.S. PIN GROUTED 4'-0" OC.
4.07 BLOCK OR CONCRETE BEAM. SEE STRUCTURAL.

DIVISION 5 – METALS

5.01 MISC. STEEL AND CONNECTORS, SEE STRUCTURAL.
5.02 UPLIFT CONNECTOR. SEE STRUCTURAL.
5.03 METAL DECK. SEE STRUCTURAL.
5.04 STRUCTURAL STEEL. SEE STRUCTURAL.
5.05 PRE-ENGINEERED METAL TRUSSES
5.06 3 5/8" 20 GAUGE METAL STUDS @ 24" O.C. (U.N.O. ON STRUCTURAL)
5.07 5 5/8" 20 GAUGE METAL STUDS @ 24" O.C. (U.N.O. ON STRUCTURAL)
5.08 STANDING SEAM METAL ROOF
5.09 7 5/8" 20 GAUGE METAL STUDS @ 24" O.C. (U.N.O. ON STRUCTURAL)
5.10 PREFABRICATED ALUMINUM RAILING
5.11 PREFABRICATED ALUMINUM LATTICE

DIVISION 6 – WOOD AND PLASTICS

6.01 PRESSSURE TREATED WOOD BLOCKING.
6.02 WOOD SHIMS.
6.03 3/4" PLYWOOD SHEATHING.
6.04 WOOD BLOCKING.
6.05 PRESSURE TREATED 3/4" FURRING STRIP.
6.06 NOT USED
6.07 PRESSURE TREATED 2X BLOCKING
6.08 5/8" DENSGLASS SHEATHING, TAPED AND SEALED.
6.09 PRE-ENGINEERED WOOD TRUSSES
6.10 NOM. 2X8 CONTINUOUS SUB-FASCIA.
6.11 NOM. 2X10 CONTINUOUS FASCIA – BREAK METAL WRAPPED
6.12 2X12 CLEAR TREATED CEDAR.
6.13 CLEAR TREATED CEDAR POST (SEE STRCUTRAL)
6.14 CLEAR TREATED CEDAR BRACKETS
6.15 NOT USED
6.16 STRUCTURAL WOOD BEAM / POST. SEE STRUCTURAL
6.17 CUSTOM WOOD BEAM W/ TENSIONS CABELS (NON STRUCTURAL)
6.18 1X CLEAR TREATED CEDAR POST SURROUND.
6.19 1X4 CLEAR TREATED CEDAR, CENTER ON POST
6.20 2X8 CLEAR TREATED CEDAR, NOTCH FOR RAFTERS ABOVE

DIVISION 7 – THERMAL AND MOISTURE PROTECTION

7.01 R-11 MIN. INSULATION.
7.02 R-30 MIN. INSULATION.
7.03 RACK WOOL SOUND BATTS.
7.04 3/4" R-3 MIN. RIGID INSULATION BOARD.
7.05 6' MIL POLYETHYLENE VAPOR BARRIER.
7.06 SEALANT (BACKER ROD IF NEEDED)
7.07 2 PIECE COUNTER FLASHING
7.08 ROOF TO WALL FLASHING
7.09 3.1" ROOF INSULATION BOARD
7.10 TPO ROOFING SYSTEM
7.11 TAPERED INSULATION TO PROVIDE POSITIVE DRAINAGE
7.12 PREFINISHED SHEETMETAL SCUPPER AND DOWNSPOUT
7.13 .24 PREFINISHED ALUMINUM BREAKMETAL FASCIA.
7.14 .24 PREFINISHED ALUMINUM BREAKMETAL CAP. WITH CONTINUOUS HOLD DOWN CLIPS
7.15 FIRE CAULK
7.16 5 PLY ROOFING
7.17 ICE AND WATER SHIELD
7.18 PREMANUFACTURED & PREFINISHED ALUMINUM ROOF EDGE WITH CONTINUOUS HOLD DOWN CLIPS
7.19 "TYVEK" TYPE BUILDING PAPER, OVERLAP 4" MIN.
7.20 3" ALUMINUM CONTINUOUS SOFFIT VENT
7.21 2" DIAMETER VENT HOLES
7.22 EAVE / RAKE FLASHING
7.23 SEALANT TO CLOSE END OF PANEL
7.24 HEAD FLASHING
7.25 FLASHING TAPE

DIVISION 8 – DOORS AND WINDOWS

8.01 PREHUNG H.M. DOOR W/ FRAME. THERMAL RATED. PAINTED. COLOR TBD.
8.02 CANVAS AWNING
8.03 WEATHERSTRIPPING.
8.04 ALUMINUM THRESHOLD.
8.05 ALUMINUM STOREFRONT ENTRANCE DOOR, MEDIUM STYLE.
8.06 ALUMINUM STOREFRONT FRAME.
8.07 STOREFRONT BREAKMETAL FLASHING W/ SILL FLASHING
8.08 SHUTTERS

DIVISION 9 – FINISHES

9.01 1/2" GYPSUM WALL BOARD. (GREEN BOARD IN WET AREAS).
9.02 PAINTED FINISH.
9.03 EXTERIOR STUCCO FINISH SYSTEM.
9.04 EXTERIOR STUCCO FINISH SYSTEM-RAISED PROFILE.
9.05 EIFS EXTRUDED BANDING.
9.06 EIFS ACCENTS.
9.07 5/8" GYPSUM WALL BOARD. (GREEN BOARD IN WET AREAS)
9.08 5/8" TYPE "X" GYPSUM WALL BOARD.
9.09 BLOCK MOULDING.
9.10 SUSPENDED ACOUSTICAL CEILING.
9.11 CONTROL JOINT
9.12 CEMENTITIOUS SIDING
9.13 6" CEMENTITOUS SIDING TRIM BOARD
9.14 1" STUCCO REVEAL
9.15 3" STUCCO REVEAL
9.16 4" STUCCO REVEAL
9.17 1/2" CONTROL JOINT W/ FLASHING, SEE DETAIL 3/A302
9.18 STUCCO DRIP EDGE
9.19 HARDI VENTED SOFFIT PANELS OR EQUAL

DIVISION 10 – EQUIPMENT

10.01 PAINTED CAST ALUMINUM SIGNAGE, BACK-LIT
10.02 LIGHTING, SEE ELECTRICAL
10.03 GUTTER WITH DOWNSPOUTS

HARRIS GENERAL CONTRACTORS

LAKE COUNTY BUILDING SERVICES
This document must be on jobsite for inspections.
This document was reviewed for code compliance; this does not relieve the applicant from correcting errors and omissions and complying with the current Florida Building Code.

JWB ARCHITECTS
LIC. # AA26001266
2295 S. HIAWASSEE RD.
SUITE 304
ORLANDO, FLORIDA 32835
PH:407.298-5020
FX:407.298-5030

Owner:
ALI JAWAD

ELEVATIONS

PLANTATION PLAZA
HWY 27
LEESBURG, FLORIDA

Architect of Record
John W. Burt - AR93163

Revisions:

Date:	Drawn By:	Checked By:
06-05-2019	RR	JWB

Project No.
19-019

Sheet No.
A301

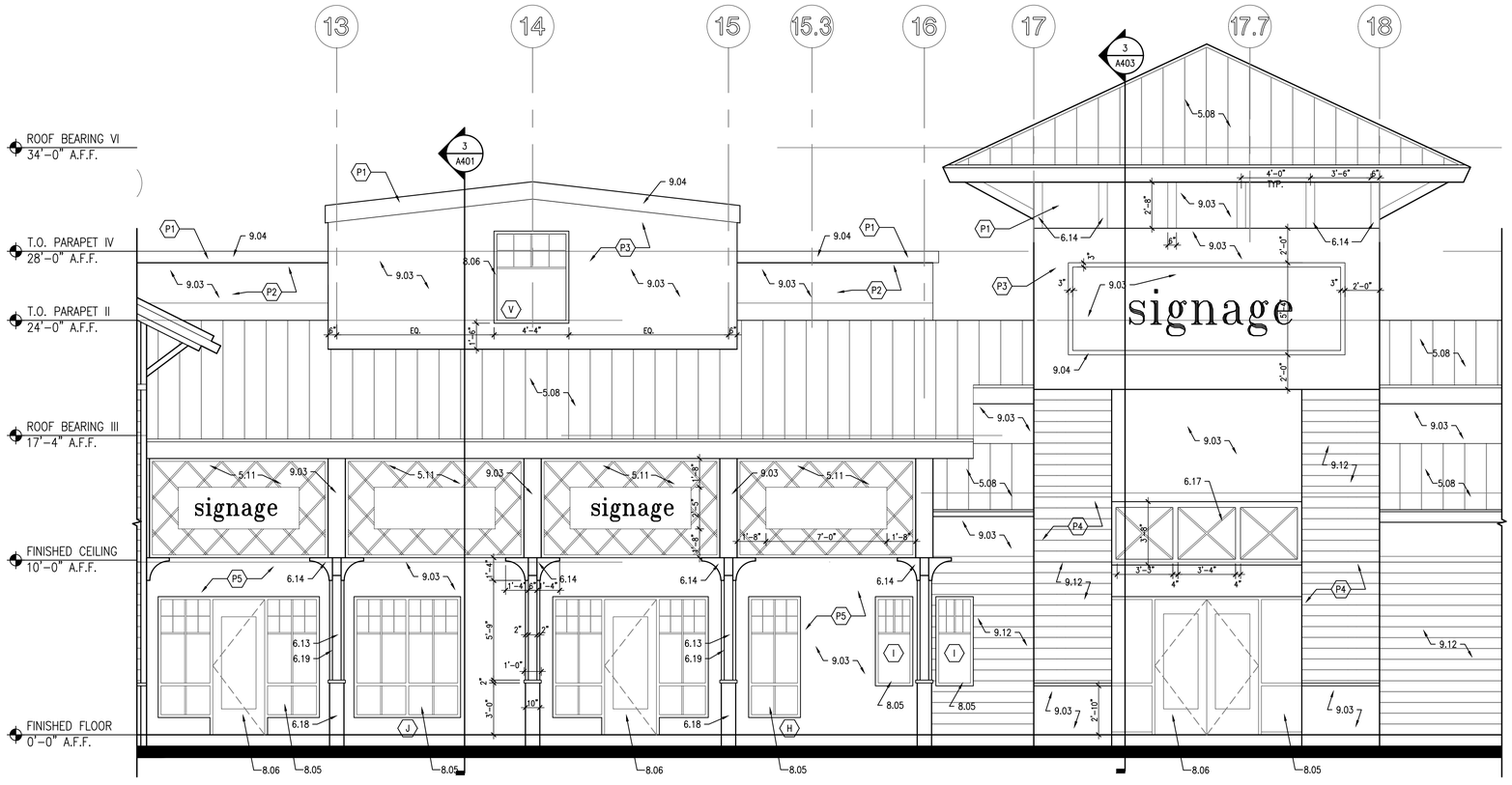

1 A302 **ENLARGED EAST ELEVATION**

SCALE: 1 / 4" = 1 ' - 0 "

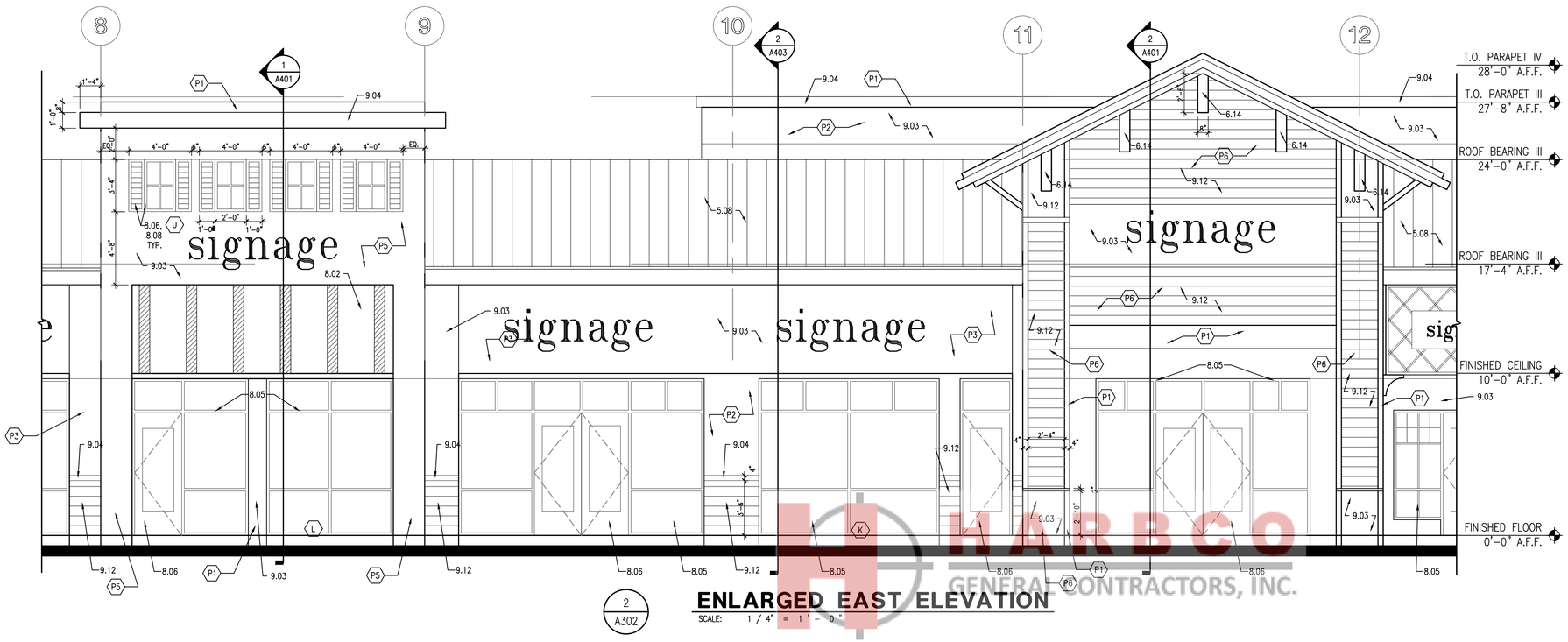

2 A302 **ENLARGED EAST ELEVATION**

SCALE: 1 / 4" = 1 ' - 0 "

KEYNOTES

DIVISION 1 – GENERAL REQUIREMENTS

1.1 THESE GENERAL KEYNOTES ARE ORGANIZED BASE UPON 16 DIVISIONS SET UP BY THE CONSTRUCTION SPECIFICATIONS INSTITUTE.

DIVISION 2 – SITEWORK

2.01 FINISH GRADE.
2.02 TREATED COMPACTED FILL.
2.03 CONCRETE APRON OR WALKWAY. SLOPE 1/4"=1'-0"

DIVISION 3 – CONCRETE

3.01 CONCRETE SLAB. SEE STRUCTURAL.
3.02 CONCRETE FOOTING. SEE STRUCTURAL.
3.03 HORIZONTAL REBAR. SEE STRUCTURAL.
3.04 CONCRETE DECK. SEE STRUCTURAL
3.05 VERT. REBAR. SEE STRUCTURAL.
3.06 CONCRETE FILLED BLOCK VERTICAL CELLS. SEE STRUCTURAL.

DIVISION 4 – MASONRY

4.01 8X8X16 NORMAL WEIGHT C.M.U.
4.02 8X8X16 NORMAL WEIGHT C.M.U. BOND BEAM, SEE STRUCTURAL.
4.03 EXTRUDED PRECAST CONCRETE SILL.
4.04 EXTRUDED PRECAST CONCRETE LINTEL. SEE STRUCTURAL.
4.05 12X8X16 NORMAL WEIGHT C.M.U.
4.06 PRE-CAST CONCRETE CAP.
W/ 1/2"x4" S.S PIN GROUTED 4'-0" OC
4.07 BLOCK OR CONCRETE BEAM. SEE STRUCTURAL.

DIVISION 5 – METALS

5.01 MISC. STEEL AND CONNECTORS, SEE STRUCTURAL.
5.02 UPLIFT CONNECTOR, SEE STRUCTURAL.
5.03 METAL DECK. SEE STRUCTURAL.
5.04 STRUCTURAL STEEL. SEE STRUCTURAL.
5.05 PRE-ENGINEERED METAL TRUSSES
5.06 3 5/8" 20 GAUGE METAL STUDS @ 24" O.C. (U.N.O. ON STRUCTURAL)
5.07 5 5/8" 20 GAUGE METAL STUDS @ 24" O.C. (U.N.O. ON STRUCTURAL)
5.08 STANDING SEAM METAL ROOF
5.09 7 5/8" 20 GAUGE METAL STUDS @ 24" O.C. (U.N.O. ON STRUCTURAL)
5.10 PREFABRICATED ALUMINUM RAILING
5.11 PREFABRICATED ALUMINUM LATTICE

DIVISION 6 – WOOD AND PLASTICS

6.01 PRESSSURE TREATED WOOD BLOCKING.
6.02 WOOD SHIMS.
6.03 3/4" PLYWOOD SHEATHING.
6.04 WOOD BLOCKING.
6.05 PRESSURE TREATED 3/4" FURRING STRIP.
6.06 NOT USED
6.07 PRESSURE TREATED 2X BLOCKING
6.08 5/8" DENSGLASS SHEATHING, TAPED AND SEALED.
6.09 PRE-ENGINEERED WOOD TRUSSES
6.10 NOM. 2X8 CONTINUOUS SUB-FASCIA.
6.11 NOM. 2X10 CONTINUOUS FASCIA – BREAK METAL WRAPPED
6.12 2X12 CLEAR TREATED CEDAR
6.13 CLEAR TREATED CEDAR POST (SEE STRCUTRAL)
6.14 CLEAR TREATED CEDAR BRACKETS
6.15 NOT USED
6.16 STRUCTURAL WOOD BEAM / POST. SEE STRUCTURAL
6.17 CUSTOM WOOD BEAM W/ TENSIONS CABELS (NON STRUCTURAL)
6.18 1X CLEAR TREATED CEDAR POST SURROUND
6.19 1X4 CLEAR TREATED CEDAR, CENTER ON POST
6.20 2X8 CLEAR TREATED CEDAR, NOTCH FOR RAFTERS ABOVE

DIVISION 7 – THERMAL AND MOISTURE PROTECTION

7.01 R-11 MIN. INSULATION.
7.02 R-30 MIN. INSULATION.
7.03 RACK WOOL SOUND BATTS.
7.04 3/4" R-3 MIN. RIGID INSULATION BOARD.
7.05 6' MIL POLYETHYLENE VAPOR BARRIER.
7.06 SEALANT (BACKER ROD IF NEEDED)
7.07 2 PIECE COUNTER FLASHING
7.08 ROOF TO WALL FLASHING
7.09 3.1" ROOF INSULATION BOARD
7.10 TPO ROOFING SYSTEM
7.11 TAPERED INSULATION TO PROVIDE POSITIVE DRAINAGE
7.12 PREFINISHED SHEETMETAL SCUPPER AND DOWNSPOUT
7.13 .24 PREFINISHED ALUMINUM BREAKMETAL FASCIA.
7.14 .24 PREFINISHED ALUMINUM BREAKMETAL CAP. WITH CONTINUOUS HOLD DOWN CLIPS
7.15 FIRE CAULK
7.16 5 PLY ROOFING
7.17 ICE AND WATER SHIELD
7.18 PREMANUFACTURED & PREFINISHED ALUMINUM ROOF EDGE WITH CONTINUOUS HOLD DOWN CLIPS
7.19 "TYVEK" TYPE BUILDING PAPER, OVERLAP 4" MIN.
7.20 3" ALUMINUM CONTINUOUS SOFFIT VENT
7.21 2" DIAMETER VENT HOLES
7.22 EAVE / RAKE FLASHING
7.23 SEALANT TO CLOSE END OF PANEL
7.24 HEAD FLASHING
7.25 FLASHING TAPE

DIVISION 8 – DOORS AND WINDOWS

8.01 PREHUNG H.M. DOOR W/ FRAME. THERMAL RATED. PAINTED. COLOR TBD.
8.02 CANVAS AWNING
8.03 WEATHERSTRIPPING.
8.04 ALUMINUM THRESHOLD.
8.05 ALUMINUM STOREFRONT ENTRANCE DOOR, MEDIUM STYLE.
8.06 ALUMINUM STOREFRONT FRAME.
8.07 STOREFRONT BREAKMETAL FLASHING W/ SILL FLASHING
8.08 SHUTTERS

DIVISION 9 – FINISHES

9.01 1/2" GYPSUM WALL BOARD. (GREEN BOARD IN WET AREAS).
9.02 PAINTED FINISH.
9.03 EXTERIOR STUCCO FINISH SYSTEM.
9.04 EXTERIOR STUCCO FINISH SYSTEM–RAISED PROFILE.
9.05 EIFS EXTRUDED BANDING.
9.06 EIFS ACCENTS.
9.07 5/8" GYPSUM WALL BOARD. (GREEN BOARD IN WET AREAS)
9.08 5/8" TYPE 'X" GYPSUM WALL BOARD.
9.09 BLOCK MOULDING.
9.10 SUSPENDED ACOUSTICAL CEILING.
9.11 CONTROL JOINT
9.12 CEMENTITOUS SIDING
9.13 6" CEMENTITOUS SIDING TRIM BOARD
9.14 1" STUCCO REVEAL
9.15 3" STUCCO REVEAL
9.16 4" STUCCO REVEAL
9.17 1/2" CONTROL JOINT W/ FLASHING, SEE DETAIL 3/A302
9.18 STUCCO DRIP EDGE
9.19 HARDI VENTED SOFFIT PANELS OR EQUAL

DIVISION 10 – EQUIPMENT

10.01 PAINTED CAST ALUMINUM SIGNAGE, BACK-LIT
10.02 LIGHTING, SEE ELECTRICAL
10.03 GUTTER WITH DOWNSPOUTS

EXTERIOR PAINT SCHEDULE:

(P1) : COLOR 1 (LIGHT CREAM)
(P2) : COLOR 2 (BEIGE)
(P3) : COLOR 3 (BURNT YELLOW)
(P4) : COLOR 4 (RED BROWN)
(P5) : COLOR 5 (BURNT ORANGE)
(P6) : COLOR 6 (BLUE GREEN)

* ACTUAL COLORS MAY VARY SLIGHTLY. A 10' WIDE MOCKUP ON THE ACTUAL BUILDING IS REQUESTED FOR EACH DIFFERENT SCHEME FOR ARCHITECT'S APPROVAL.

LAKE COUNTY BUILDING SERVICES
This document must be on jobsite for inspections.
This document was reviewed for code compliance; this does not relieve the applicant from correcting errors and omissions and complying with the current Florida Building Code.

HARBCO GENERAL CONTRACTORS, INC.

JWB ARCHITECTS
LIC. # AA26001266
2295 S. HIAWASSEE RD.
SUITE 304
ORLANDO, FLORIDA 32835
PH:407.298-5020
FX:407.298-5030

Owner:
ALI JAWAD

ELEVATIONS

PLANTATION PLAZA
HWY 27
LEESBURG, FLORIDA

Architect of Record
John W. Burt – AR93163

Revisions:

Date:	Drawn By:	Checked By:
06-05-2019	RR	JWB

Project No.
19-019

Sheet No.
A302

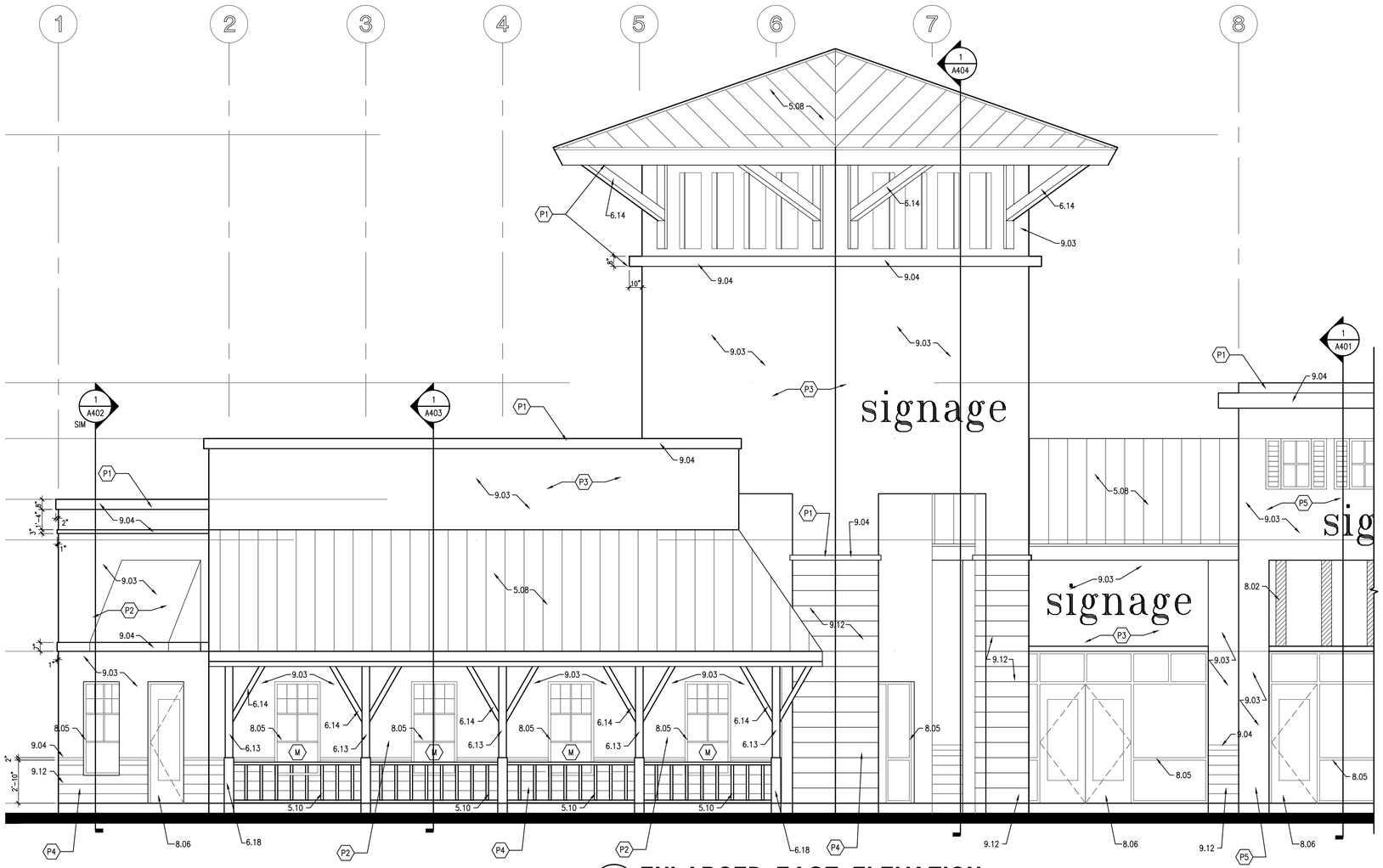

1 A303 **ENLARGED EAST ELEVATION**

SCALE: 1 / 4" = 1 ' - 0 "

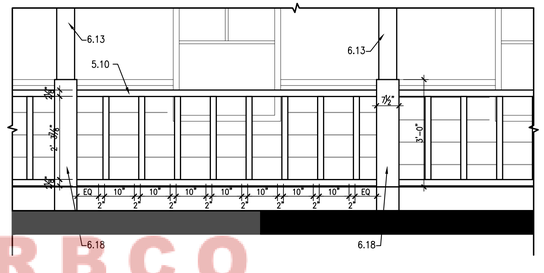

2 A303 **ENLARGED RAILING DETAIL**

SCALE: 1 / 2" = 1 ' - 0 "

LAKE COUNTY BUILDING SERVICES
This document must be on jobsite for inspections.
This document was reviewed for code compliance; this does not relieve the applicant from correcting errors and omissions and complying with the current Florida Building Code.
HARBCO GENERAL CONTRACTORS, INC.

KEYNOTES

DIVISION 1 – GENERAL REQUIREMENTS

1.1 THESE GENERAL KEYNOTES ARE ORGANIZED BASE UPON 16 DIVISIONS SET UP BY THE CONSTRUCTION SPECIFICATIONS INSTITUTE.

DIVISION 2 – SITEWORK

2.01 FINISH GRADE.
2.02 TREATED COMPACTED FILL.
2.03 CONCRETE APRON OR WALKWAY. SLOPE 1/4"=1'-0"

DIVISION 3 – CONCRETE

3.01 CONCRETE SLAB. SEE STRUCTURAL.
3.02 CONCRETE FOOTING. SEE STRUCTURAL.
3.03 HORIZONTAL REBAR. SEE STRUCTURAL.
3.04 CONCRETE DECK. SEE STRUCTURAL
3.05 VERT. REBAR. SEE STRUCTURAL.
3.06 CONCRETE FILLED BLOCK VERTICAL CELLS. SEE STRUCTURAL.

DIVISION 4 – MASONRY

4.01 8X8X16 NORMAL WEIGHT C.M.U.
4.02 8X8X16 NORMAL WEIGHT C.M.U. BOND BEAM, SEE STRUCTURAL.
4.03 EXTRUDED PRECAST CONCRETE SILL
4.04 EXTRUDED PRECAST CONCRETE LINTEL. SEE STRUCTURAL.
4.05 12X8X16 NORMAL WEIGHT C.M.U.
4.06 PRE-CAST CONCRETE CAP
W/ 1/2"x4' S.S PIN GROUTED 4'-0" OC
4.07 BLOCK OR CONCRETE BEAM. SEE STRUCTURAL.

DIVISION 5 – METALS

5.01 MISC. STEEL AND CONNECTORS, SEE STRUCTURAL.
5.02 UPLIFT CONNECTOR, SEE STRUCTURAL.
5.03 METAL DECK. SEE STRUCTURAL.
5.04 STRUCTURAL STEEL. SEE STRUCTURAL.
5.05 PRE-ENGINEERED METAL TRUSSES
5.06 3 5/8" 20 GAUGE METAL STUDS @ 24" O.C. (U.N.O. ON STRUCTURAL)
5.07 5 5/8" 20 GAUGE METAL STUDS @ 24" O.C. (U.N.O. ON STRUCTURAL)
5.08 STANDING SEAM METAL ROOF
5.09 7 5/8" 20 GAUGE METAL STUDS @ 24" O.C. (U.N.O. ON STRUCTURAL)
5.10 PREFABRICATED ALUMINUM RAILING
5.11 PREFABRICATED ALUMINUM LATTICE

DIVISION 6 – WOOD AND PLASTICS

6.01 PRESSSURE TREATED WOOD BLOCKING.
6.02 WOOD SHIMS.
6.03 3/4" PLYWOOD SHEATHING.
6.04 WOOD BLOCKING.
6.05 PRESSURE TREATED 3/4" FURRING STRIP.
6.06 NOT USED
6.07 PRESSURE TREATED 2X BLOCKING
6.08 5/8" DENSGLASS SHEATHING, TAPED AND SEALED.
6.09 PRE-ENGINEERED WOOD TRUSSES
6.10 NOM. 2X8 CONTINUOUS SUB-FASCIA.
6.11 NOM. 2X10 CONTINUOUS FASCIA – BREAK METAL WRAPPED
6.12 2X12 CLEAR TREATED CEDAR
6.13 CLEAR TREATED CEDAR POST (SEE STRCUTRAL)
6.14 CLEAR TREATED CEDAR BRACKETS
6.15 NOT USED
6.16 STRUCTURAL WOOD BEAM / POST. SEE STRUCTURAL
6.17 CUSTOM WOOD BEAM W/ TENSIONS CABELS (NON STRUCTURAL)
6.18 1X CLEAR TREATED CEDAR POST SURROUND
6.19 1X4 CLEAR TREATED CEDAR, CENTER ON POST.
6.20 2X6 CLEAR TREATED CEDAR, NOTCH FOR RAFTERS ABOVE

DIVISION 7 – THERMAL AND MOISTURE PROTECTION

7.01 R-11 MIN. INSULATION.
7.02 R-30 MIN. INSULATION.
7.03 RACK WOOL SOUND BATTS.
7.04 3/4" R-3 MIN. RIGID INSULATION BOARD.
7.05 6 MIL POLYETHYLENE VAPOR BARRIER.
7.06 SEALANT (BACKER ROD IF NEEDED)
7.07 2 PIECE COUNTER FLASHING
7.08 ROOF TO WALL FLASHING
7.09 3.1" ROOF INSULATION BOARD
7.10 TPO ROOFING SYSTEM
7.11 TAPERED INSULATION TO PROVIDE POSITIVE DRAINAGE
7.12 PREFINISHED SHEETMETAL SCUPPER AND DOWNSPOUT
7.13 .24 PREFINISHED ALUMINUM BREAKMETAL FASCIA.
7.14 .24 PREFINISHED ALUMINUM BREAKMETAL CAP. WITH CONTINUOUS HOLD DOWN CLIPS
7.15 FIRE CAULK
7.16 5 PLY ROOFING
7.17 ICE AND WATER SHIELD
7.18 PREMANUFACTURED & PREFINISHED ALUMINUM ROOF EDGE WITH CONTINUOUS HOLD DOWN CLIPS
7.19 "TYVEK" TYPE BUILDING PAPER, OVERLAP 4" MIN.
7.20 3" ALUMINUM CONTINUOUS SOFFIT VENT
7.21 2" DIAMETER VENT HOLES
7.22 EAVE / RAKE FLASHING
7.23 SEALANT TO CLOSE END OF PANEL
7.24 HEAD FLASHING
7.25 FLASHING TAPE

DIVISION 8 – DOORS AND WINDOWS

8.01 PREHUNG H.M. DOOR W/ FRAME. THERMAL RATED. PAINTED. COLOR TBD.
8.02 CANVAS AWNING
8.03 WEATHERSTRIPPING.
8.04 ALUMINUM THRESHOLD.
8.05 ALUMINUM STOREFRONT ENTRANCE DOOR, MEDIUM STYLE.
8.06 ALUMINUM STOREFRONT FRAME.
8.07 STOREFRONT BREAKMETAL FLASHING W/ SILL FLASHING
8.08 SHUTTERS

DIVISION 9 – FINISHES

9.01 1/2" GYPSUM WALL BOARD. (GREEN BOARD IN WET AREAS).
9.02 PAINTED FINISH.
9.03 EXTERIOR STUCCO FINISH SYSTEM.
9.04 EXTERIOR STUCCO FINISH SYSTEM-RAISED PROFILE.
9.05 EIFS EXTRUDED BANDING.
9.06 EIFS ACCENTS.
9.07 5/8" GYPSUM WALL BOARD. (GREEN BOARD IN WET AREAS)
9.08 5/8" TYPE 'X" GYPSUM WALL BOARD.
9.09 BLOCK MOULDING.
9.10 SUSPENDED ACOUSTICAL CEILING.
9.11 CONTROL JOINT
9.12 CEMENTITOUS SIDING
9.13 6" CEMENTITOUS SIDING TRIM BOARD
9.14 1" STUCCO REVEAL
9.15 3" STUCCO REVEAL
9.16 4" STUCCO REVEAL
9.17 1/2" CONTROL JOINT W/ FLASHING, SEE DETAIL 3/A302
9.18 STUCCO DRIP EDGE
9.19 HARDI VENTED SOFFIT PANELS OR EQUAL

DIVISION 10 – EQUIPMENT

10.01 PAINTED CAST ALUMINUM SIGNAGE, BACK-LIT
10.02 LIGHTING, SEE ELECTRICAL
10.03 GUTTER WITH DOWNSPOUTS

EXTERIOR PAINT SCHEDULE:

P1 : COLOR 1 (LIGHT CREAM)
P2 : COLOR 2 (BEIGE)
P3 : COLOR 3 (BURNT YELLOW)
P4 : COLOR 4 (RED BROWN)
P5 : COLOR 5 (BURNT ORANGE)
P6 : COLOR 6 (BLUE GREEN)

* ACTUAL COLORS MAY VARY SLIGHTLY. A 10' WIDE MOCKUP ON THE ACTUAL BUILDING IS REQUESTED FOR EACH DIFFERENT SCHEME FOR ARCHITECT'S APPROVAL.

JWB ARCHITECTS
LIC: # AA26001266
2295 S. HIAWASSEE RD.
SUITE 304
ORLANDO, FLORIDA 32835
PH:407.298-5020
FX:407.298-5030

Owner:

ALI JAWAD

ELEVATIONS

PLANTATION PLAZA
HWY 27
LEESBURG, FLORIDA

Architect of Record:
John W. Burt - AR93163

Revisions:

Date:	Drawn By:	Checked By:
06-05-2019	RR	JWB

Project No.
19-019

Sheet No.
A303

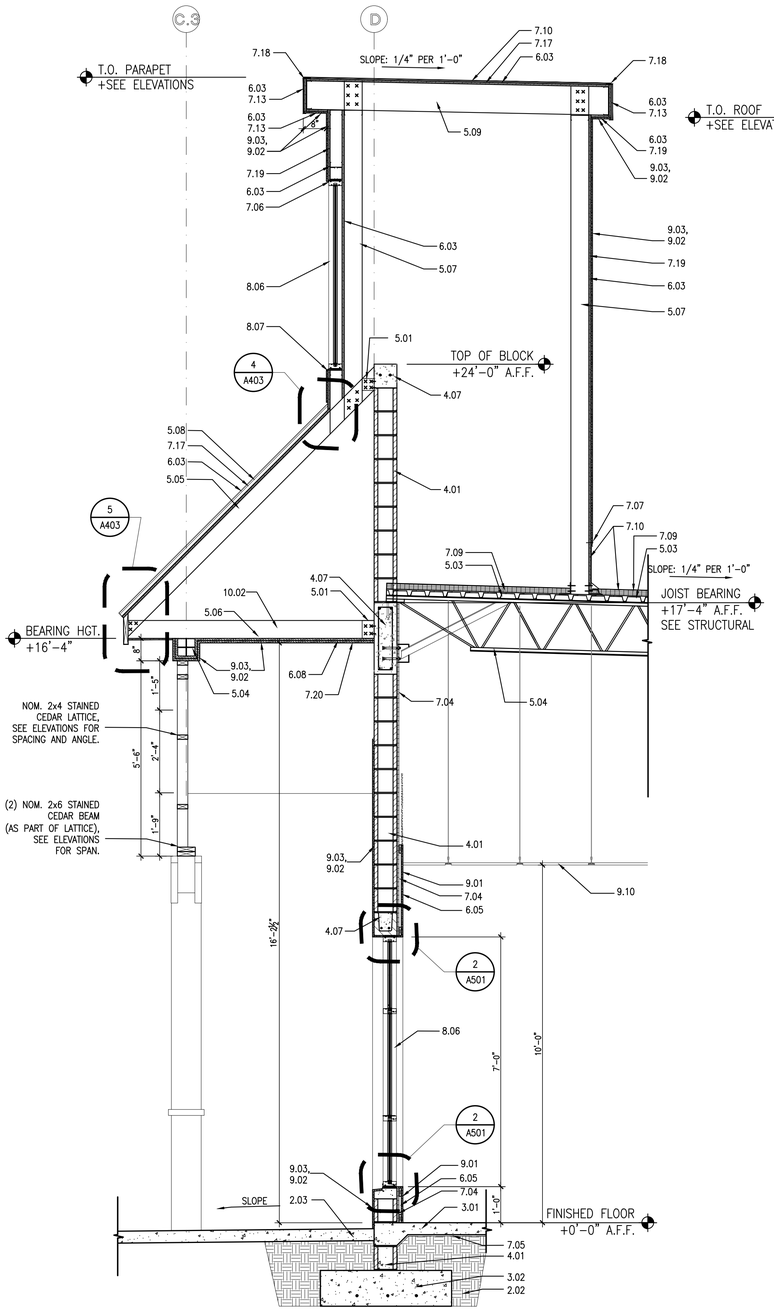

3 A401 **WALL SECTION**
SCALE: 1 / 2" = 1 ' - 0 "

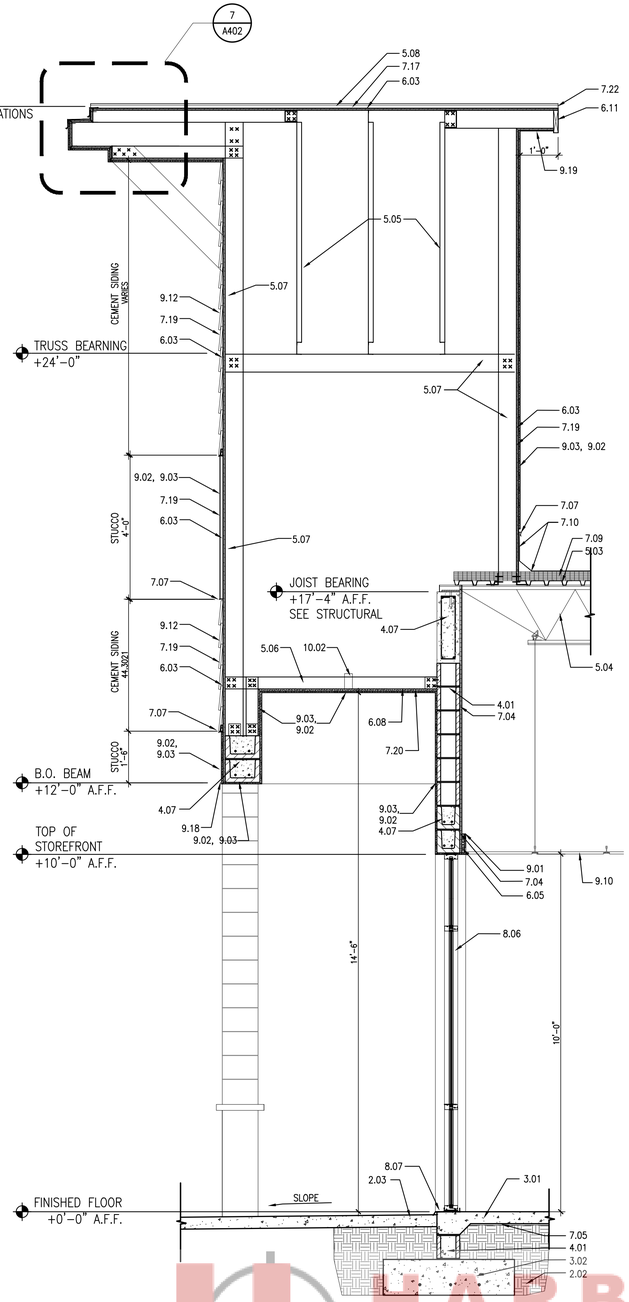

2 A401 **WALL SECTION**
SCALE: 1 / 2" = 1 ' - 0 "

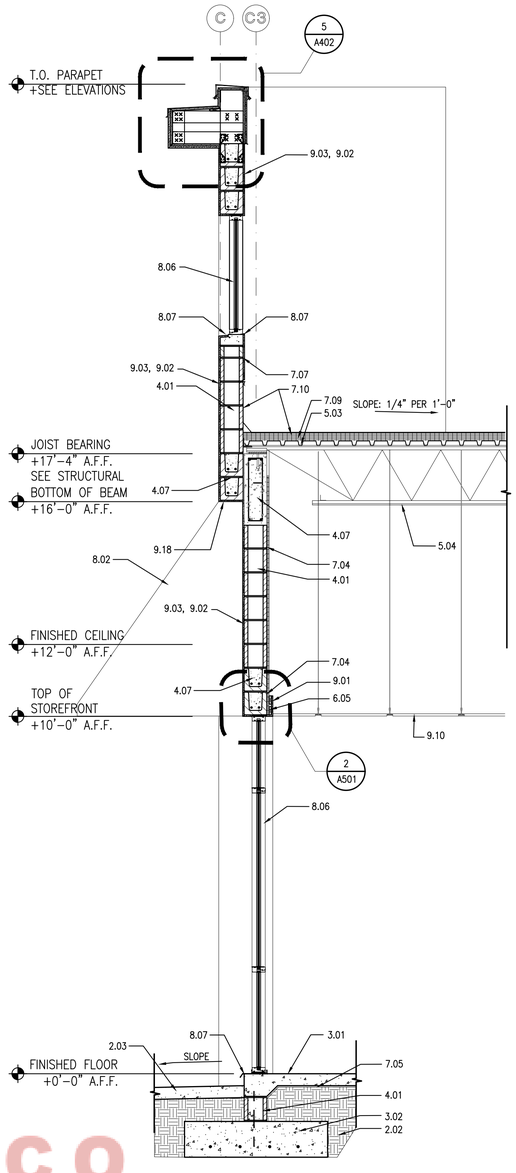

1 A401 **WALL SECTION**
SCALE: 1 / 2" = 1 ' - 0 "

KEYNOTES

DIVISION 1 – GENERAL REQUIREMENTS

1.1 THESE GENERAL KEYNOTES ARE ORGANIZED BASE UPON 16 DIVISIONS SET UP BY THE CONSTRUCTION SPECIFICATIONS INSTITUTE.

DIVISION 2 – SITEWORK

2.01 FINISH GRADE.
2.02 TREATED COMPACTED FILL.
2.03 CONCRETE APRON OR WALKWAY. SLOPE 1/4"=1'-0"

DIVISION 3 – CONCRETE

3.01 CONCRETE SLAB. SEE STRUCTURAL.
3.02 CONCRETE FOOTING. SEE STRUCTURAL.
3.03 HORIZONTAL REBAR. SEE STRUCTURAL.
3.04 CONCRETE DECK, SEE STRUCTURAL
3.05 VERT. REBAR. SEE STRUCTURAL.
3.06 CONCRETE FILLED BLOCK VERTICAL CELLS. SEE STRUCTURAL.

DIVISION 4 – MASONRY

4.01 8X8X16 NORMAL WEIGHT C.M.U.
4.02 8X8X16 NORMAL WEIGHT C.M.U. BOND BEAM, SEE STRUCTURAL.
4.03 EXTRUDED PRECAST CONCRETE SILL
4.04 EXTRUDED PRECAST CONCRETE LINTEL. SEE STRUCTURAL.
4.05 12X8X16 NORMAL WEIGHT C.M.U.
4.06 PRE-CAST CONCRETE CAP.
W/ 1/2 x4" S.S PIN GROUTED 4'-0" OC
4.07 BLOCK OR CONCRETE BEAM. SEE STRUCTURAL.

DIVISION 5 – METALS

5.01 MISC. STEEL AND CONNECTORS, SEE STRUCTURAL.
5.02 UPLIFT CONNECTOR, SEE STRUCTURAL.
5.03 METAL DECK. SEE STRUCTURAL.
5.04 STRUCTURAL STEEL. SEE STRUCTURAL.
5.05 PRE-ENGINEERED METAL TRUSSES
5.06 .3 5/8" 20 GAUGE METAL STUDS @ 24" O.C. (U.N.O. ON STRUCTURAL)
5.07 5 5/8" 20 GAUGE METAL STUDS @ 24" O.C. (U.N.O. ON STRUCTURAL)
5.08 STANDING SEAM METAL ROOF
5.09 7 5/8" 20 GAUGE METAL STUDS @ 24" O.C. (U.N.O. ON STRUCTURAL)
5.10 PREFABRICATED ALUMINUM RAILING
5.11 PREFABRICATED ALUMINUM LATTICE

DIVISION 6 – WOOD AND PLASTICS

6.01 PRESSSURE TREATED WOOD BLOCKING.
6.02 WOOD SHIMS.
6.03 3/4" PLYWOOD SHEATHING.
6.04 WOOD BLOCKING.
6.05 PRESSURE TREATED 3/4" FURRING STRIP.
6.06 NOT USED
6.07 PRESSURE TREATED 2X BLOCKING
6.08 5/8" DENSGLASS SHEATHING, TAPED AND SEALED.
6.09 PRE-ENGINEERED WOOD TRUSSES
6.10 NOM. 2X6 CONTINUOUS SUB-FASCIA.
6.11 NOM. 2X10 CONTINUOUS FASCIA – BREAK METAL WRAPPED
6.12 2X12 CLEAR TREATED CEDAR
6.13 CLEAR TREATED CEDAR POST (SEE STRCUTRAL)
6.14 CLEAR TREATED CEDAR BRACKETS
6.15 NOT USED
6.16 STRUCTURAL WOOD BEAM / POST. SEE STRUCTURAL
6.17 CUSTOM WOOD BEAM W/ TENSIONS CABELS (NON STRUCTURAL)
6.18 1X CLEAR TREATED CEDAR POST SURROUND
6.19 1X4 CLEAR TREATED CEDAR, CENTER ON POST
6.20 2X8 CLEAR TREATED CEDAR, NOTCH FOR RAFTERS ABOVE

DIVISION 7 – THERMAL AND MOISTURE PROTECTION

7.01 R-11 MIN. INSULATION.
7.02 R-30 MIN. INSULATION.
7.03 RACK WOOL SOUND BATTS.
7.04 3/4" R-3 MIN. RIGID INSULATION BOARD.
7.05 6 MIL POLYETHYLENE VAPOR BARRIER.
7.06 SEALANT (BACKER ROD IF NEEDED)
7.07 2 PIECE COUNTER FLASHING
7.08 ROOF TO WALL FLASHING
7.09 3.1" ROOF INSULATION BOARD
7.10 TPO ROOFING SYSTEM
7.11 TAPERED INSULATION TO PROVIDE POSITIVE DRAINAGE
7.12 PREFINISHED SHEETMETAL SCUPPER AND DOWNSPOUT
7.13 .24 PREFINISHED ALUMINUM BREAKMETAL FASCIA.
7.14 .24 PREFINISHED ALUMINUM BREAKMETAL CAP.
WITH CONTINUOUS HOLD DOWN CLIPS
7.15 FIRE CAULK
7.16 5 PLY ROOFING
7.17 ICE AND WATER SHIELD
7.18 PREMANUFACTURED & PREFINISHED ALUMINUM ROOF EDGE
WITH CONTINUOUS HOLD DOWN CLIPS
7.19 "TYVEK" TYPE BUILDING PAPER, OVERLAP 4" MIN.
7.20 3" ALUMINUM CONTINUOUS SOFFIT VENT
7.21 2" DIAMETER VENT HOLES
7.22 EAVE / RAKE FLASHING
7.23 SEALANT TO CLOSE END OF PANEL
7.24 HEAD FLASHING
7.25 FLASHING TAPE

DIVISION 8 – DOORS AND WINDOWS

8.01 PREHUNG H.M. DOOR W/ FRAME. THERMAL RATED. PAINTED. COLOR TBD.
8.02 CANVAS AWNING
8.03 WEATHERSTRIPPING.
8.04 ALUMINUM THRESHOLD.
8.05 ALUMINUM STOREFRONT ENTRANCE DOOR, MEDIUM STYLE.
8.06 ALUMINUM STOREFRONT FRAME.
8.07 STOREFRONT BREAKMETAL FLASHING W/ SILL FLASHING
8.08 SHUTTERS

DIVISION 9 – FINISHES

9.01 1/2" GYPSUM WALL BOARD. (GREEN BOARD IN WET AREAS).
9.02 PAINTED FINISH.
9.03 EXTERIOR STUCCO FINISH SYSTEM.
9.04 EXTERIOR STUCCO FINISH SYSTEM-RAISED PROFILE.
9.05 EIFS EXTRUDED BANDING.
9.06 EIFS ACCENTS.
9.07 5/8" GYPSUM WALL BOARD. (GREEN BOARD IN WET AREAS)
9.08 5/8" TYPE "X" GYPSUM WALL BOARD.
9.09 BLOCK MOULDING.
9.10 SUSPENDED ACOUSTICAL CEILING.
9.11 CONTROL JOINT
9.12 CEMENTITOUS SIDING
9.13 6" CEMENTITOUS SIDING TRIM BOARD
9.14 1" STUCCO REVEAL
9.15 3" STUCCO REVEAL
9.16 4" STUCCO REVEAL
9.17 1/2" CONTROL JOINT W/ FLASHING, SEE DETAIL 3/A302
9.18 STUCCO DRIP EDGE
9.19 HARDI VENTED SOFFIT PANELS OR EQUAL

DIVISION 10 – EQUIPMENT

10.01 PAINTED CAST ALUMINUM SIGNAGE, BACK-LIT
10.02 LIGHTING, SEE ELECTRICAL
10.03 GUTTER WITH DOWNSPOUTS

JWB ARCHITECTS
LIC. # AA26001266
2295 S. HIAWASSEE RD.
SUITE 304
ORLANDO, FLORIDA 32835
PH:407.298-5020
FX:407.298-5030

Owner:

ALI JAWAD

WALL SECTIONS

PLANTATION PLAZA
HWY 27
LEESBURG, FLORIDA

Architect of Record:
John W. Burt - AR93163

Revisions:
1 9-17-08 – OWNER CHANGES

Date:	Drawn By:	Checked By:
06-05-2019	RR	JWB

Project No.
19-019

Sheet No.
A401

LAKE COUNTY BUILDING SERVICES
This document must be on jobsite for inspections.
This document was reviewed for code compliance; this does not relieve the applicant from correcting errors and omissions and complying with the current Florida Building Code.

HARBCO GENERAL CONTRACTORS, INC.

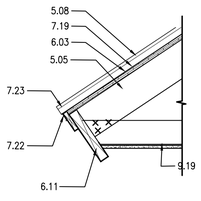

10 A402 **DETAIL**
SCALE: 1" = 1 ' - 0 "

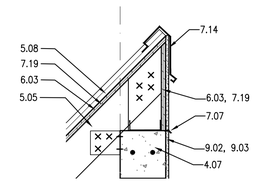

9 A402 **DETAIL**
SCALE: 1" = 1 ' - 0 "

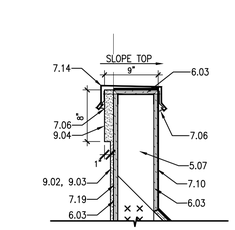

8 A402 **DETAIL**
SCALE: 1" = 1 ' - 0 "

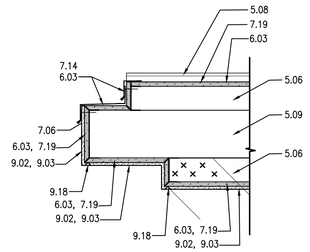

7 A402 **DETAIL**
SCALE: 1" = 1 ' - 0 "

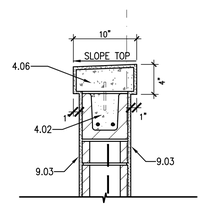

6 A402 **DETAIL**
SCALE: 1" = 1 ' - 0 "

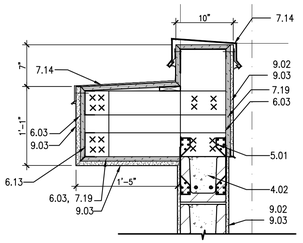

5 A402 **DETAIL**
SCALE: 1" = 1 ' - 0 "

KEYNOTES

DIVISION 1 – GENERAL REQUIREMENTS

1.1 THESE GENERAL KEYNOTES ARE ORGANIZED BASE UPON 16 DIVISIONS SET UP BY THE CONSTRUCTION SPECIFICATIONS INSTITUTE.

DIVISION 2 – SITEWORK

2.01 FINISH GRADE.
2.02 TREATED COMPACTED FILL.
2.03 CONCRETE APRON OR WALKWAY. SLOPE 1/4"=1'-0"

DIVISION 3 – CONCRETE

3.01 CONCRETE SLAB. SEE STRUCTURAL.
3.02 CONCRETE FOOTING. SEE STRUCTURAL.
3.03 HORIZONTAL REBAR. SEE STRUCTURAL.
3.04 CONCRETE DECK, SEE STRUCTURAL
3.05 VERT. REBAR. SEE STRUCTURAL.
3.06 CONCRETE FILLED BLOCK VERTICAL CELLS. SEE STRUCTURAL.

DIVISION 4 – MASONRY

4.01 8X8X16 NORMAL WEIGHT C.M.U.
4.02 8X8X16 NORMAL WEIGHT C.M.U. BOND BEAM, SEE STRUCTURAL.
4.03 EXTRUDED PRECAST CONCRETE SILL
4.04 EXTRUDED PRECAST CONCRETE LINTEL. SEE STRUCTURAL.
4.05 12X8X16 NORMAL WEIGHT C.M.U.
4.06 PRE-CAST CONCRETE CAP.
W / 1/2"x4" S.S PIN GROUTED 4'-0" OC
4.07 BLOCK OR CONCRETE BEAM. SEE STRUCTURAL.

DIVISION 5 – METALS

5.01 MISC. STEEL AND CONNECTORS, SEE STRUCTURAL.
5.02 UPLIFT CONNECTOR, SEE STRUCTURAL.
5.03 METAL DECK. SEE STRUCTURAL.
5.04 STRUCTURAL STEEL. SEE STRUCTURAL.
5.05 PRE-ENGINEERED METAL TRUSSES
5.06 3 5/8" 20 GAUGE METAL STUDS @ 24" O.C. (U.N.O. ON STRUCTURAL)
5.07 5 5/8" 20 GAUGE METAL STUDS @ 24" O.C. (U.N.O. ON STRUCTURAL)
5.08 STANDING SEAM METAL ROOF
5.09 7 5/8" 20 GAUGE METAL STUDS @ 24" O.C. (U.N.O. ON STRUCTURAL)
5.10 PREFABRICATED ALUMINUM RAILING
5.11 PREFABRICATED ALUMINUM LATTICE

DIVISION 6 – WOOD AND PLASTICS

6.01 PRESSSURE TREATED WOOD BLOCKING.
6.02 WOOD SHIMS.
6.03 3/4" PLYWOOD SHEATHING.
6.04 WOOD BLOCKING.
6.05 PRESSURE TREATED 3/4" FURRING STRIP.
6.06 NOT USED
6.07 PRESSURE TREATED 2X BLOCKING
6.08 5/8" DENSGLASS SHEATHING, TAPED AND SEALED.
6.09 PRE-ENGINEERED WOOD TRUSSES
6.10 NOM. 2X8 CONTINUOUS SUB-FASCIA
6.11 NOM. 2X10 CONTINUOUS FASCIA - BREAK METAL WRAPPED
6.12 2X12 CLEAR TREATED CEDAR
6.13 CLEAR TREATED CEDAR POST (SEE STRCUTRAL)
6.14 CLEAR TREATED CEDAR BRACKETS
6.15 NOT USED
6.16 STRUCTURAL WOOD BEAM / POST. SEE STRUCTURAL.
6.17 CUSTOM WOOD BEAM W/ TENSIONS CABELS (NON STRUCTURAL)
6.18 1X CLEAR TREATED CEDAR POST SURROUND
6.19 1X4 CLEAR TREATED CEDAR, CENTER ON POST
6.20 2X8 CLEAR TREATED CEDAR, NOTCH FOR RAFTERS ABOVE

DIVISION 7 – THERMAL AND MOISTURE PROTECTION

7.01 R-11 MIN. INSULATION.
7.02 R-30 MIN. INSULATION.
7.03 RACK WOOL SOUND BATTS.
7.04 3/4" R-3 MIN. RIGID INSULATION BOARD.
7.05 6 MIL POLYETHYLENE VAPOR BARRIER.
7.06 SEALANT (BACKER ROD IF NEEDED)
7.07 2 PIECE COUNTER FLASHING
7.08 ROOF TO WALL FLASHING
7.09 3.1" ROOF INSULATION BOARD
7.10 TPO ROOFING SYSTEM
7.11 TAPERED INSULATION TO PROVIDE POSITIVE DRAINAGE
7.12 PREFINISHED SHEETMETAL SCUPPER AND DOWNSPOUT
7.13 .24 PREFINISHED ALUMINUM BREAKMETAL FASCIA.
7.14 .24 PREFINISHED ALUMINUM BREAKMETAL CAP.
WITH CONTINUOUS HOLD DOWN CLIPS
7.15 FIRE CAULK
7.16 5 PLY ROOFING
7.17 ICE AND WATER SHIELD
7.18 PREMANUFACTURED & PREFINISHED ALUMINUM ROOF EDGE
WITH CONTINUOUS HOLD DOWN CLIPS
7.19 "TYVEK" TYPE BUILDING PAPER, OVERLAP 4" MIN.
7.20 3" ALUMINUM CONTINUOUS SOFFIT VENT
7.21 2" DIAMETER VENT HOLES
7.22 EAVE / RAKE FLASHING
7.23 SEALANT TO CLOSE END OF PANEL
7.24 HEAD FLASHING
7.25 FLASHING TAPE

DIVISION 8 – DOORS AND WINDOWS

8.01 PREHUNG H.M. DOOR W/ FRAME. THERMAL RATED. PAINTED. COLOR TBD.
8.02 CANVAS AWNING
8.03 WEATHERSTRIPPING.
8.04 ALUMINUM THRESHOLD.
8.05 ALUMINUM STOREFRONT ENTRANCE DOOR, MEDIUM STYLE.
8.06 ALUMINUM STOREFRONT FRAME.
8.07 STOREFRONT BREAKMETAL FLASHING W/ SILL FLASHING
8.08 SHUTTERS

DIVISION 9 – FINISHES

9.01 1/2" GYPSUM WALL BOARD. (GREEN BOARD IN WET AREAS).
9.02 PAINTED FINISH.
9.03 EXTERIOR STUCCO FINISH SYSTEM.
9.04 EXTERIOR STUCCO FINISH SYSTEM-RAISED PROFILE.
9.05 EIFS EXTRUDED BANDING.
9.06 EIFS ACCENTS
9.07 5/8" GYPSUM WALL BOARD. (GREEN BOARD IN WET AREAS)
9.08 5/8" TYPE "X" GYPSUM WALL BOARD.
9.09 BLOCK MOULDING.
9.10 SUSPENDED ACOUSTICAL CEILING.
9.11 CONTROL JOINT
9.12 CEMENTITOUS SIDING
9.13 6" CEMENTITOUS SIDING TRIM BOARD
9.14 1" STUCCO REVEAL
9.15 3" STUCCO REVEAL
9.16 4" STUCCO REVEAL
9.17 1/2" CONTROL JOINT W/ FLASHING, SEE DETAIL 3/A302
9.18 STUCCO DRIP EDGE
9.19 HARDI VENTED SOFFIT PANELS OR EQUAL

DIVISION 10 – EQUIPMENT

10.01 PAINTED CAST ALUMINUM SIGNAGE, BACK-LIT
10.02 LIGHTING, SEE ELECTRICAL
10.03 GUTTER WITH DOWNSPOUTS

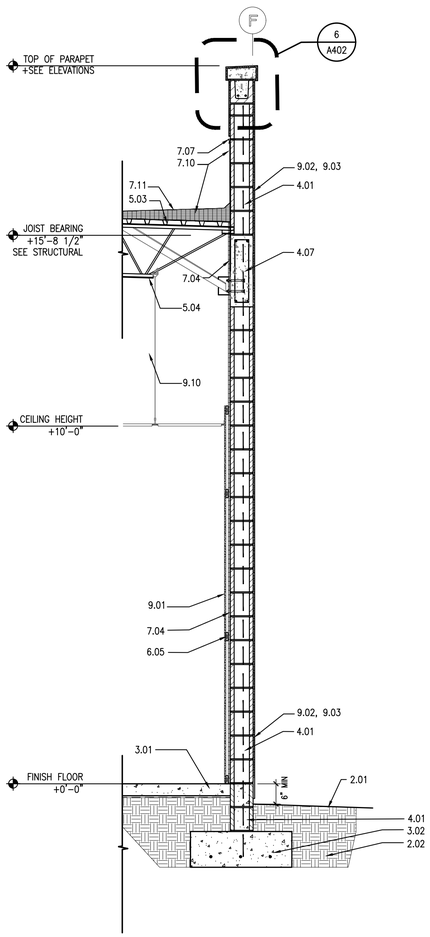

4 A402 **WALL SECTION**
SCALE: 1 / 2" = 1 ' - 0 "

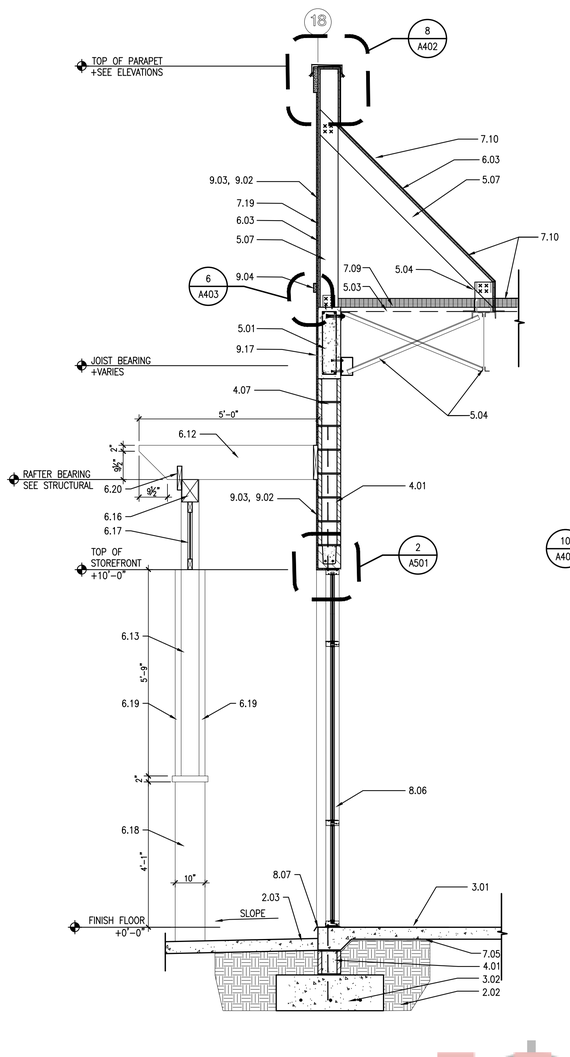

3 A402 **WALL SECTION**
SCALE: 1 / 2" = 1 ' - 0 "

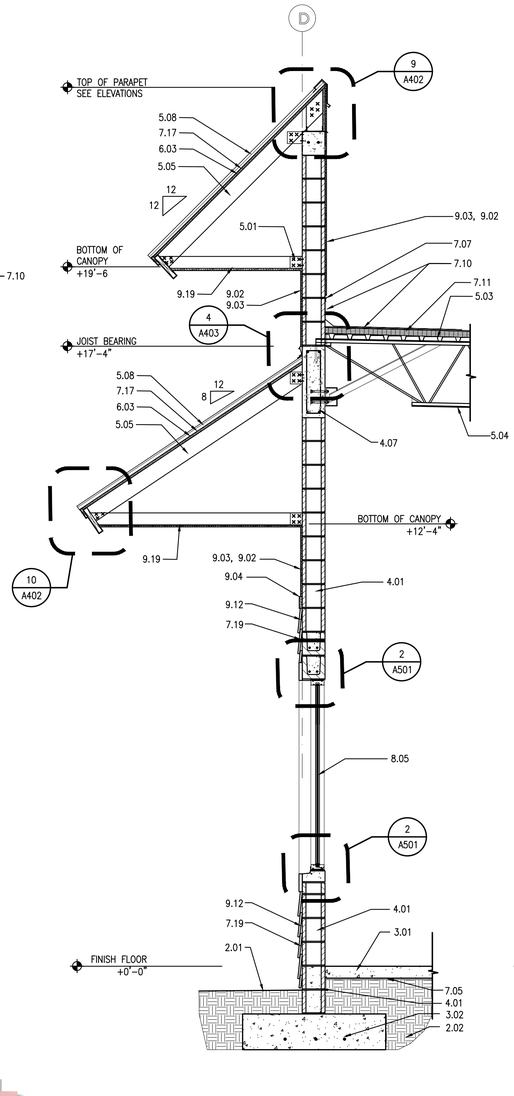

2 A402 **WALL SECTION**
SCALE: 1 / 2" = 1 ' - 0 "

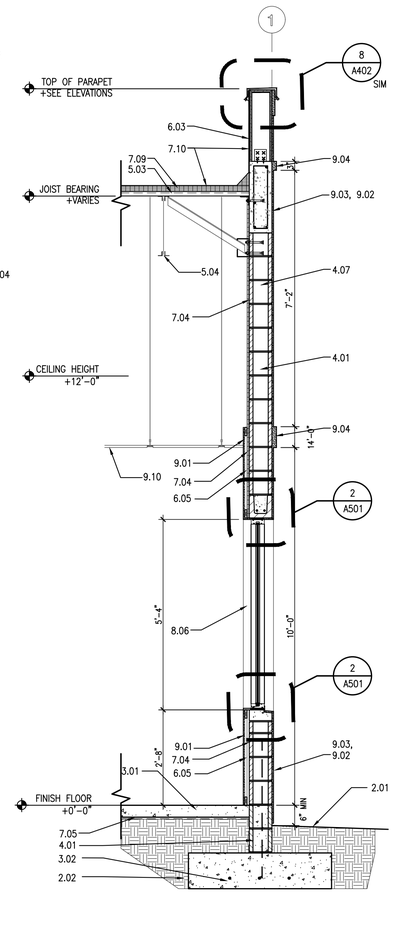

1 A402 **WALL SECTION**
SCALE: 1 / 2" = 1 ' - 0 "

HARBCO GENERAL CONTRACTORS, INC.

LAKE COUNTY BUILDING SERVICES
This document must be on jobsite for inspections.
This document was reviewed for code compliance; this does not relieve the applicant from correcting errors and omissions and complying with the current Florida Building Code.

JWB ARCHITECTS
LIC.# AA26001266
2295 S. HIAWASSEE RD.
SUITE 304
ORLANDO, FLORIDA 32835
PH:407.298-5020
FX:407.298-5030

Owner:
ALI JAWAD

WALL SECTIONS

PLANTATION PLAZA
HWY 27
LEESBURG, FLORIDA

Architect of Record:
John W. Burt - AR93163

Revisions:

Date:	Drawn By:	Checked By:
06-05-2019	RR	JWB

Project No.
19-019

Sheet No.
A402

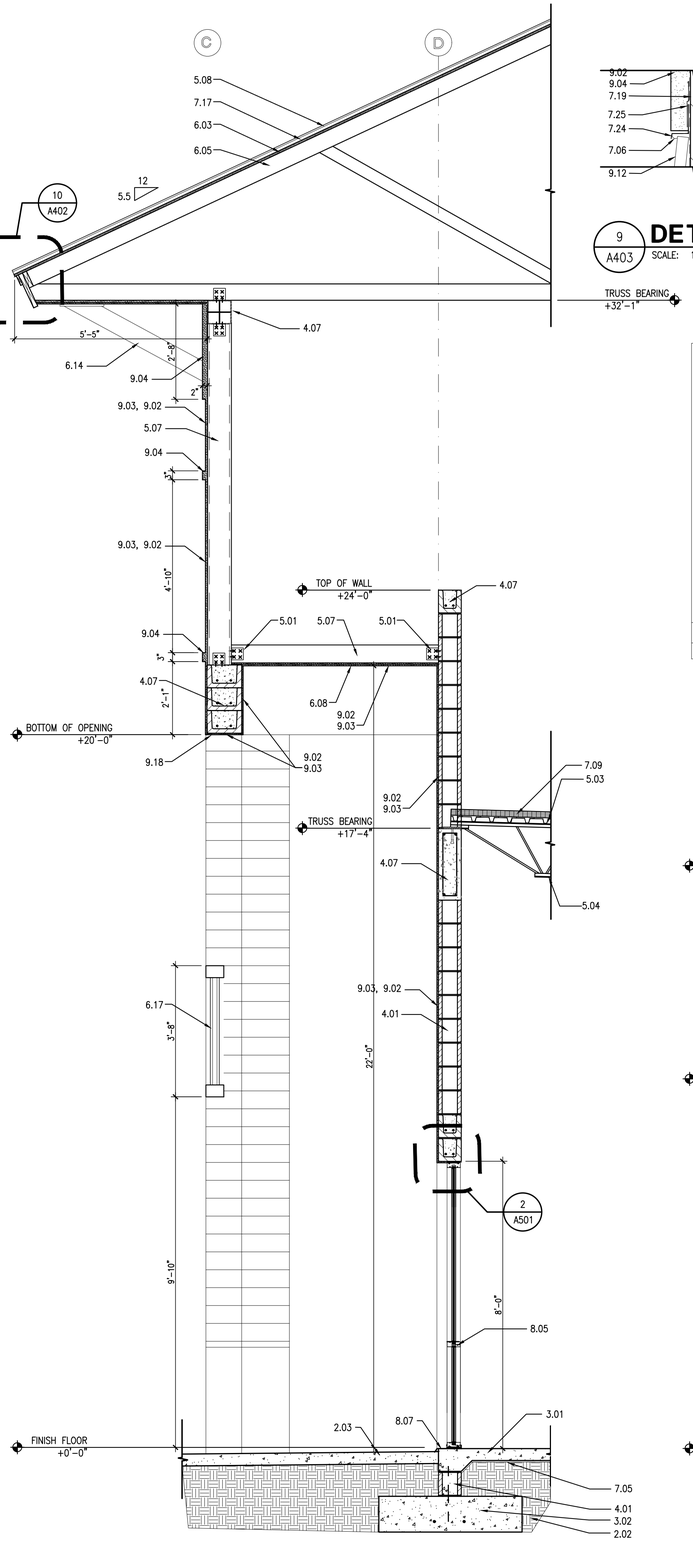

3 A403 **WALL SECTION**
SCALE: 1 / 2" = 1 ' - 0 "

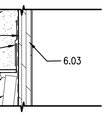

9 A403 **DETAIL**
SCALE: 1 1/2" = 1'- 0"

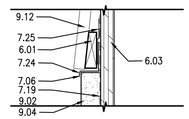

8 A403 **DETAIL**
SCALE: 1 1/2" = 1'- 0"

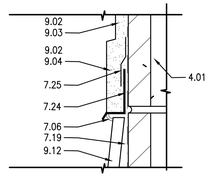

7 A403 **DETAIL**
SCALE: 1 1/2" = 1'- 0"

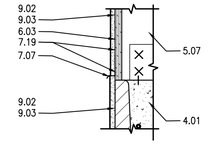

6 A403 **DETAIL**
SCALE: 1 1 /2 " = 1 ' - 0 "

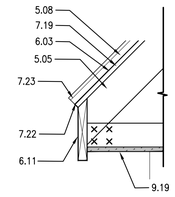

5 A403 **DETAIL**
SCALE: 1" = 1 ' - 0 "

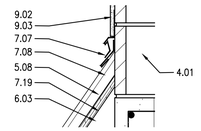

4 A403 **DETAIL**
SCALE: 1 1 / 2 " = 1 ' - 0 "

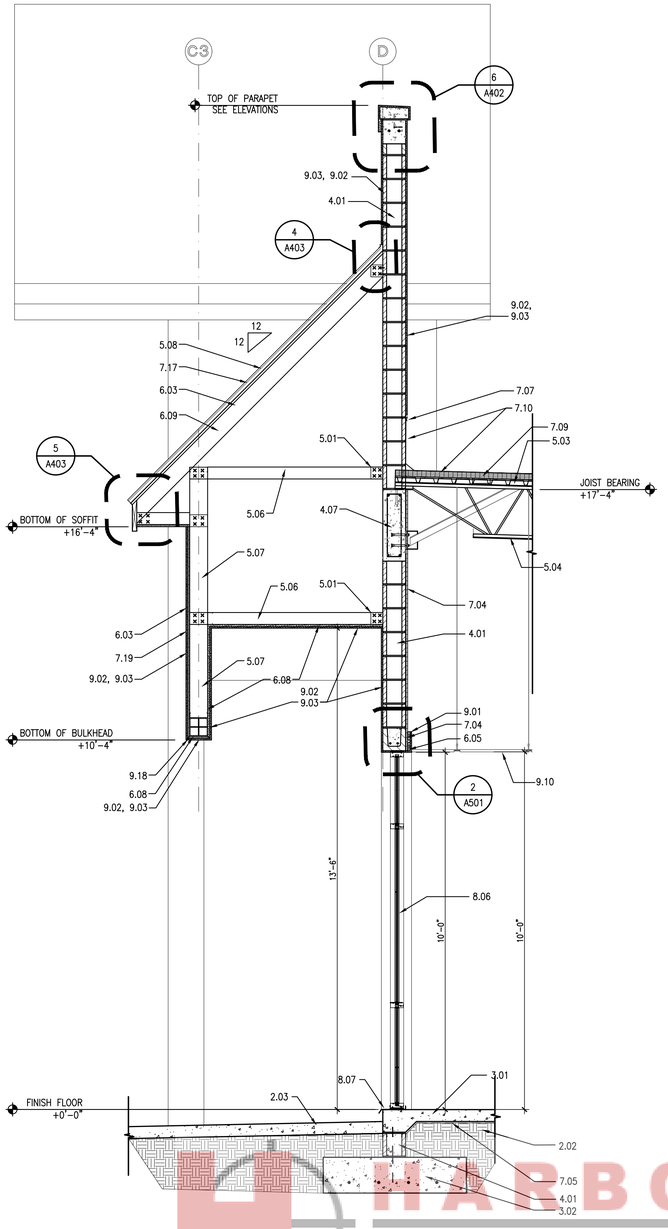

2 A403 **WALL SECTION**
SCALE: 1 / 2" = 1 ' - 0 "

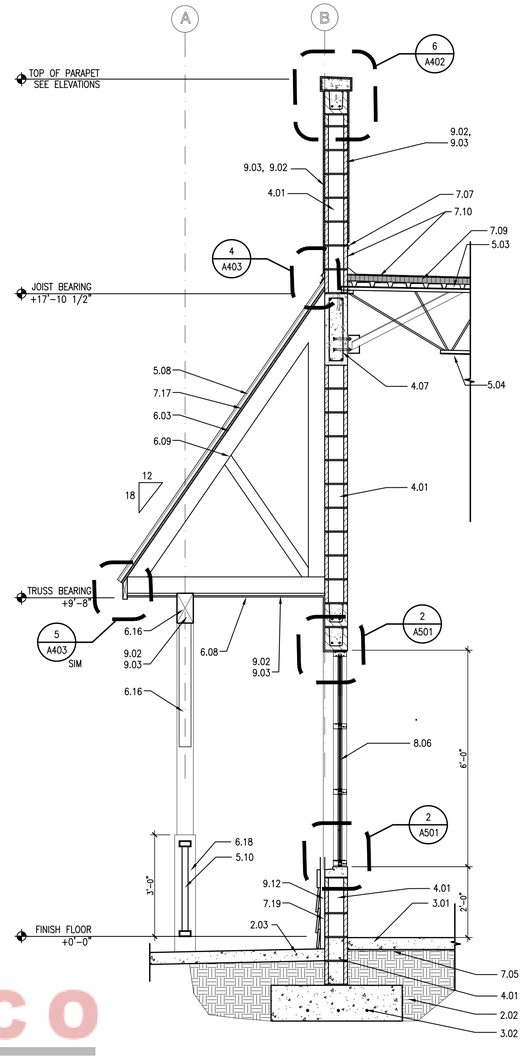

1 A403 **WALL SECTION**
SCALE: 1 / 2" = 1 ' - 0 "

KEYNOTES

DIVISION 1 – GENERAL REQUIREMENTS

1.1 THESE GENERAL KEYNOTES ARE ORGANIZED BASE UPON 16 DIVISIONS SET UP BY THE CONSTRUCTION SPECIFICATIONS INSTITUTE.

DIVISION 2 – SITEWORK

2.01 FINISH GRADE.
2.02 TREATED COMPACTED FILL.
2.03 CONCRETE APRON OR WALKWAY. SLOPE 1/4"=1'-0"

DIVISION 3 – CONCRETE

3.01 CONCRETE SLAB. SEE STRUCTURAL.
3.02 CONCRETE FOOTING. SEE STRUCTURAL.
3.03 HORIZONTAL REBAR. SEE STRUCTURAL.
3.04 CONCRETE DECK, SEE STRUCTURAL
3.05 VERT. REBAR. SEE STRUCTURAL.
3.06 CONCRETE FILLED BLOCK VERTICAL CELLS. SEE STRUCTURAL.

DIVISION 4 – MASONRY

4.01 8X8X16 NORMAL WEIGHT C.M.U.
4.02 8X8X16 NORMAL WEIGHT C.M.U. BOND BEAM, SEE STRUCTURAL.
4.03 EXTRUDED PRECAST CONCRETE SILL.
4.04 EXTRUDED PRECAST CONCRETE LINTEL. SEE STRUCTURAL.
4.05 12X8X16 NORMAL WEIGHT C.M.U.
4.06 PRE-CAST CONCRETE CAP.
W/ 1/2"x4" S.S PIN GROUTED 4'-0" OC
4.07 BLOCK OR CONCRETE BEAM. SEE STRUCTURAL.

DIVISION 5 – METALS

5.01 MISC. STEEL AND CONNECTORS, SEE STRUCTURAL.
5.02 UPLIFT CONNECTOR, SEE STRUCTURAL.
5.03 METAL DECK. SEE STRUCTURAL.
5.04 STRUCTURAL STEEL. SEE STRUCTURAL.
5.05 PRE-ENGINEERED METAL TRUSSES
5.06 3 5/8" 20 GAUGE METAL STUDS @ 24" O.C. (U.N.O. ON STRUCTURAL)
5.07 5 5/8" 20 GAUGE METAL STUDS @ 24" O.C. (U.N.O. ON STRUCTURAL)
5.08 STANDING SEAM METAL ROOF
5.09 7 5/8" 20 GAUGE METAL STUDS @ 24" O.C. (U.N.O. ON STRUCTURAL)
5.10 PREFABRICATED ALUMINUM RAILING
5.11 PREFABRICATED ALUMINUM LATTICE

DIVISION 6 – WOOD AND PLASTICS

6.01 PRESSSURE TREATED WOOD BLOCKING.
6.02 WOOD SHIMS.
6.03 3/4" PLYWOOD SHEATHING.
6.04 WOOD BLOCKING.
6.05 PRESSURE TREATED 3/4" FURRING STRIP.
6.06 NOT USED
6.07 PRESSURE TREATED 2X BLOCKING
6.08 5/8" DENSGLASS SHEATHING, TAPED AND SEALED.
6.09 PRE-ENGINEERED WOOD TRUSSES
6.10 NOM. 2X8 CONTINUOUS SUB-FASCIA.
6.11 NOM. 2X10 CONTINUOUS FASCIA – BREAK METAL WRAPPED
6.12 2X12 CLEAR TREATED CEDAR
6.13 CLEAR TREATED CEDAR POST (SEE STRCUTRAL)
6.14 CLEAR TREATED CEDAR BRACKETS
6.15 NOT USED
6.16 STRUCTURAL WOOD BEAM / POST. SEE STRUCTURAL
6.17 CUSTOM WOOD BEAM W/ TENSIONS CABELS (NON STRUCTURAL)
6.18 1X CLEAR TREATED CEDAR POST SURROUND
6.19 1X4 CLEAR TREATED CEDAR, CENTER ON POST
6.20 2X8 CLEAR TREATED CEDAR, NOTCH FOR RAFTERS ABOVE

DIVISION 7 – THERMAL AND MOISTURE PROTECTION

7.01 R-11 MIN. INSULATION.
7.02 R-30 MIN. INSULATION.
7.03 RACK WOOL SOUND BATTS.
7.04 3/4" R-3 MIN. RIGID INSULATION BOARD.
7.05 6 MIL POLYETHYLENE VAPOR BARRIER.
7.06 SEALANT (BACKER ROD IF NEEDED)
7.07 2 PIECE COUNTER FLASHING
7.08 ROOF TO WALL FLASHING
7.09 3.1" ROOF INSULATION BOARD
7.10 TPO ROOFING SYSTEM
7.11 TAPERED INSULATION TO PROVIDE POSITIVE DRAINAGE
7.12 PREFINISHED SHEETMETAL SCUPPER AND DOWNSPOUT
7.13 .24 PREFINISHED ALUMINUM BREAKMETAL FASCIA.
7.14 .24 PREFINISHED ALUMINUM BREAKMETAL CAP.
WITH CONTINUOUS HOLD DOWN CLIPS
7.15 FIRE CAULK
7.16 5 PLY ROOFING
7.17 ICE AND WATER SHIELD
7.18 PREMANUFACTURED & PREFINISHED ALUMINUM ROOF EDGE WITH CONTINUOUS HOLD DOWN CLIPS
7.19 "TYVEK" TYPE BUILDING PAPER, OVERLAP 4" MIN.
7.20 3" ALUMINUM CONTINUOUS SOFFIT VENT
7.21 2" DIAMETER VENT HOLES
7.22 EAVE / RAKE FLASHING
7.23 SEALANT TO CLOSE END OF PANEL
7.24 HEAD FLASHING
7.25 FLASHING TAPE

DIVISION 8 – DOORS AND WINDOWS

8.01 PREHUNG H.M. DOOR W/ FRAME. THERMAL RATED. PAINTED. COLOR TBD.
8.02 CANVAS AWNING
8.03 WEATHERSTRIPPING.
8.04 ALUMINUM THRESHOLD.
8.05 ALUMINUM STOREFRONT ENTRANCE DOOR, MEDIUM STYLE.
8.06 ALUMINUM STOREFRONT FRAME.
8.07 STOREFRONT BREAKMETAL FLASHING W/ SILL FLASHING
8.08 SHUTTERS

DIVISION 9 – FINISHES

9.01 1/2" GYPSUM WALL BOARD. (GREEN BOARD IN WET AREAS).
9.02 PAINTED FINISH.
9.03 EXTERIOR STUCCO FINISH SYSTEM.
9.04 EXTERIOR STUCCO FINISH SYSTEM–RAISED PROFILE.
9.05 EIFS EXTRUDED BANDING.
9.06 EIFS ACCENTS.
9.07 5/8" GYPSUM WALL BOARD. (GREEN BOARD IN WET AREAS)
9.08 5/8" TYPE "X" GYPSUM WALL BOARD.
9.09 BLOCK MOULDING.
9.10 SUSPENDED ACOUSTICAL CEILING.
9.11 CONTROL JOINT
9.12 CEMENTITOUS SIDING
9.13 6" CEMENTITOUS SIDING TRIM BOARD
9.14 1" STUCCO REVEAL
9.15 3" STUCCO REVEAL
9.16 4" STUCCO REVEAL
9.17 1/2" CONTROL JOINT W/ FLASHING, SEE DETAIL 3/A302
9.18 STUCCO DRIP EDGE
9.19 HARDI VENTED SOFFIT PANELS OR EQUAL

DIVISION 10 – EQUIPMENT

10.01 PAINTED CAST ALUMINUM SIGNAGE, BACK-LIT
10.02 LIGHTING, SEE ELECTRICAL
10.03 GUTTER WITH DOWNSPOUTS

LAKE COUNTY BUILDING SERVICES
This document must be on jobsite for inspections.
This document was reviewed for code compliance; this does not relieve the applicant from correcting errors and omissions and complying with the current Florida Building Code.

HARBCO GENERAL CONTRACTORS, INC.

JWB ARCHITECTS
LIC. # AA26001266
2295 S. HIAWASSEE RD.
SUITE 304
ORLANDO, FLORIDA 32835
PH:407.298-5020
FX:407.298-5030

Owner:
ALI JAWAD

WALL SECTIONS

PLANTATION PLAZA

HWY 27
LEESBURG, FLORIDA

Architect of Record
John W. Burt - AR93163

Revisions:

Date:	Drawn By:	Checked By:
06-05-2019	RR	JWB

Project No.
19-019

Sheet No.
A403

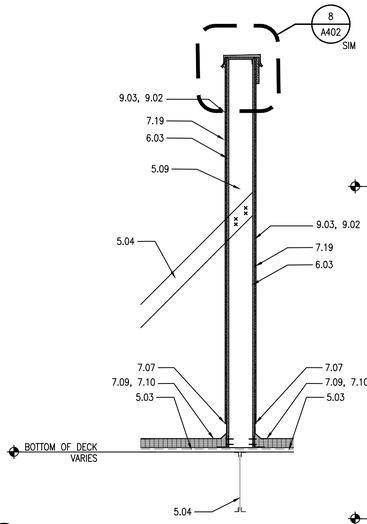

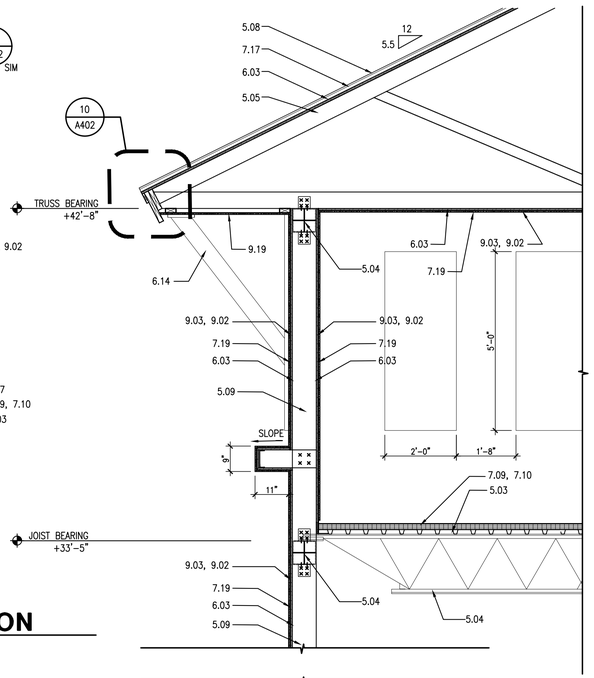

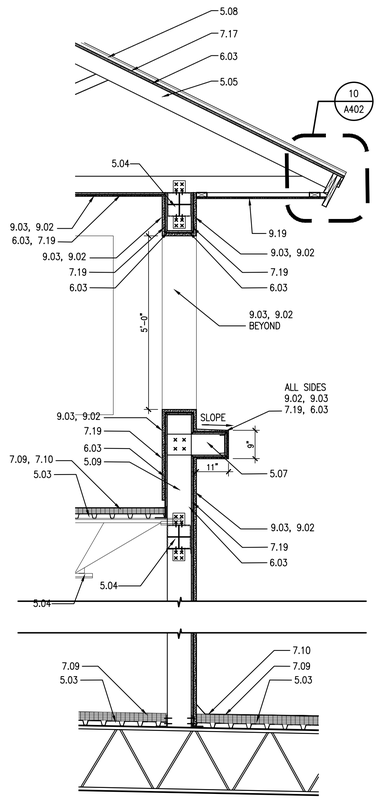

4 A404 **WALL SECTION**
SCALE: 1 / 2" = 1 ' - 0 "

2 A404 **WALL SECTION**
SCALE: 1 / 2" = 1 ' - 0 "

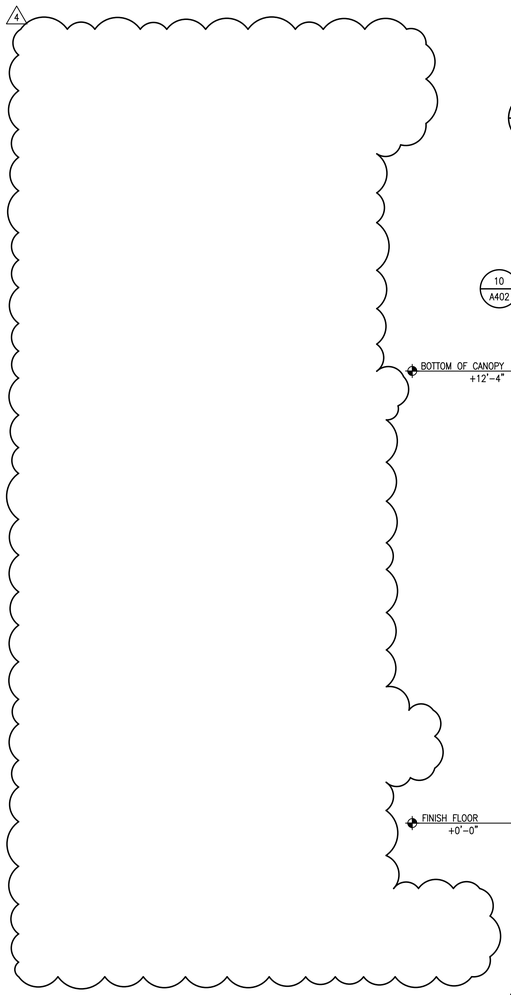

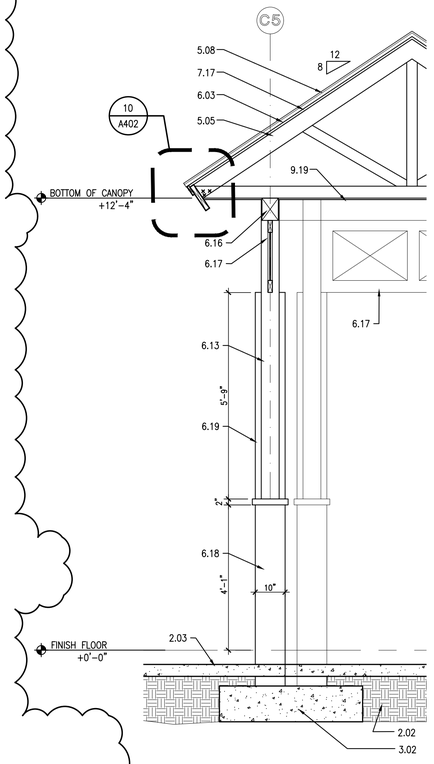

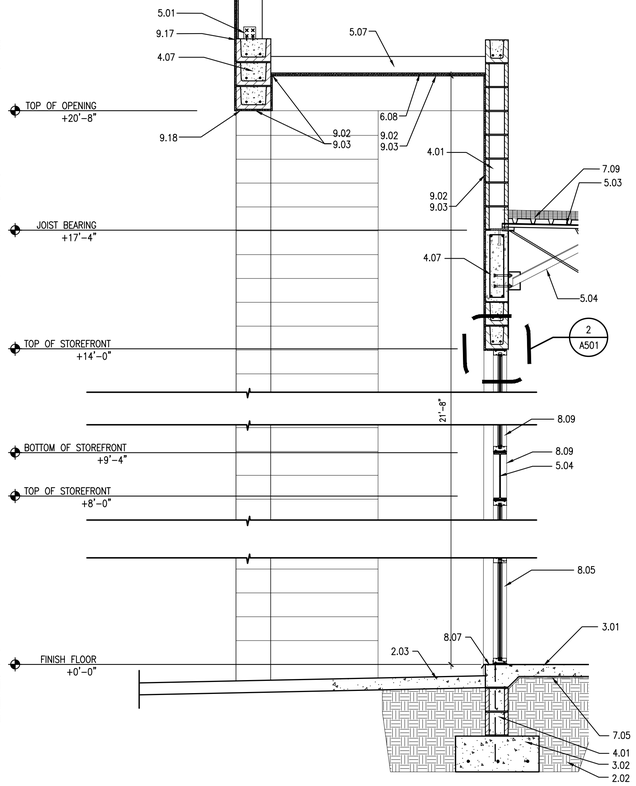

3 A404 **WALL SECTION**
SCALE: 1 / 2" = 1 ' - 0 "

1 A404 **WALL SECTION**
SCALE: 1 / 2" = 1 ' - 0 "

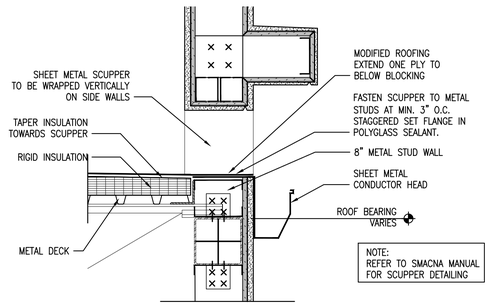

5 A404 **SCUPPER DETAIL**
SCALE: 1 " = 1 ' - 0 "

KEYNOTES

DIVISION 1 – GENERAL REQUIREMENTS

1.1 THESE GENERAL KEYNOTES ARE ORGANIZED BASE UPON 16 DIVISIONS SET UP BY THE CONSTRUCTION SPECIFICATIONS INSTITUTE.

DIVISION 2 – SITEWORK

2.01 FINISH GRADE.
2.02 TREATED COMPACTED FILL.
2.03 CONCRETE APRON OR WALKWAY. SLOPE 1/4"=1'-0"

DIVISION 3 – CONCRETE

3.01 CONCRETE SLAB. SEE STRUCTURAL.
3.02 CONCRETE FOOTING. SEE STRUCTURAL.
3.03 HORIZONTAL REBAR. SEE STRUCTURAL.
3.04 CONCRETE DECK, SEE STRUCTURAL
3.05 VERT. REBAR. SEE STRUCTURAL.
3.06 CONCRETE FILLED BLOCK VERTICAL CELLS. SEE STRUCTURAL.

DIVISION 4 – MASONRY

4.01 8X8X16 NORMAL WEIGHT C.M.U.
4.02 8X8X16 NORMAL WEIGHT C.M.U. BOND BEAM, SEE STRUCTURAL.
4.03 EXTRUDED PRECAST CONCRETE SILL
4.04 EXTRUDED PRECAST CONCRETE LINTEL. SEE STRUCTURAL.
4.05 12X8X16 NORMAL WEIGHT C.M.U.
4.06 PRE-CAST CONCRETE CAP.
W/ 1/2"x4" S.S PIN GROUTED 4'-0" OC
4.07 BLOCK OR CONCRETE BEAM. SEE STRUCTURAL.

DIVISION 5 – METALS

5.01 MISC. STEEL AND CONNECTORS, SEE STRUCTURAL.
5.02 UPLIFT CONNECTOR, SEE STRUCTURAL.
5.03 METAL DECK. SEE STRUCTURAL.
5.04 STRUCTURAL STEEL. SEE STRUCTURAL.
5.05 PRE-ENGINEERED METAL TRUSSES
5.06 3 5/8" 20 GAUGE METAL STUDS @ 24" O.C. (U.N.O. ON STRUCTURAL)
5.07 5 5/8" 20 GAUGE METAL STUDS @ 24" O.C. (U.N.O. ON STRUCTURAL)
5.08 STANDING SEAM METAL ROOF
5.09 7 5/8" 20 GAUGE METAL STUDS @ 24" O.C. (U.N.O. ON STRUCTURAL)
5.10 PREFABRICATED ALUMINUM RAILING
5.11 PREFABRICATED ALUMINUM LATTICE

DIVISION 6 – WOOD AND PLASTICS

6.01 PRESSSURE TREATED WOOD BLOCKING.
6.02 WOOD SHIMS
6.03 3/4" PLYWOOD SHEATHING.
6.04 WOOD BLOCKING.
6.05 PRESSURE TREATED 3/4" FURRING STRIP.
6.06 NOT USED
6.07 PRESSURE TREATED 2X BLOCKING
6.08 5/8" DENSGLASS SHEATHING, TAPED AND SEALED.
6.09 PRE-ENGINEERED WOOD TRUSSES
6.10 NOM. 2X8 CONTINUOUS SUB-FASCIA.
6.11 NOM. 2X10 CONTINUOUS FASCIA – BREAK METAL WRAPPED
6.12 2X12 CLEAR TREATED CEDAR
6.13 CLEAR TREATED CEDAR POST (SEE STRCUTRAL)
6.14 CLEAR TREATED CEDAR BRACKETS
6.15 NOT USED
6.16 STRUCTURAL WOOD BEAM / POST. SEE STRUCTURAL
6.17 CUSTOM WOOD BEAM W/ TENSIONS CABELS (NON STRUCTURAL)
6.18 1X CLEAR TREATED CEDAR POST SURROUND
6.19 1X4 CLEAR TREATED CEDAR, CENTER ON POST
6.20 2X8 CLEAR TREATED CEDAR, NOTCH FOR RAFTERS ABOVE

DIVISION 7 – THERMAL AND MOISTURE PROTECTION

7.01 R-11 MIN. INSULATION.
7.02 R-30 MIN. INSULATION.
7.03 RACK WOOL SOUND BATTS.
7.04 3/4" R-3 MIN. RIGID INSULATION BOARD.
7.05 6 MIL POLYETHYLENE VAPOR BARRIER.
7.06 SEALANT (BACKER ROD IF NEEDED)
7.07 2 PIECE COUNTER FLASHING
7.08 ROOF TO WALL FLASHING
7.09 3.1" ROOF INSULATION BOARD
7.10 TPO ROOFING SYSTEM
7.11 TAPERED INSULATION TO PROVIDE POSITIVE DRAINAGE
7.12 PREFINISHED SHEETMETAL SCUPPER AND DOWNSPOUT
7.13 .24 PREFINISHED ALUMINUM BREAKMETAL FASCIA.
7.14 .24 PREFINISHED ALUMINUM BREAKMETAL CAP.
WITH CONTINUOUS HOLD DOWN CLIPS
7.15 FIRE CAULK
7.16 5 PLY ROOFING
7.17 ICE AND WATER SHIELD
7.18 PREMANUFACTURED & PREFINISHED ALUMINUM ROOF EDGE
WITH CONTINUOUS HOLD DOWN CLIPS
7.19 "TYVEK" TYPE BUILDING PAPER, OVERLAP 4" MIN.
7.20 3" ALUMINUM CONTINUOUS SOFFIT VENT
7.21 2" DIAMETER VENT HOLES
7.22 EAVE / RAKE FLASHING
7.23 SEALANT TO CLOSE END OF PANEL
7.24 HEAD FLASHING
7.25 FLASHING TAPE

DIVISION 8 – DOORS AND WINDOWS

8.01 PREHUNG H.M. DOOR W/ FRAME. THERMAL RATED. PAINTED. COLOR TBD.
8.02 CANVAS AWNING
8.03 WEATHERSTRIPPING.
8.04 ALUMINUM THRESHOLD.
8.05 ALUMINUM STOREFRONT ENTRANCE DOOR, MEDIUM STYLE.
8.06 ALUMINUM STOREFRONT FRAME.
8.07 STOREFRONT BREAKMETAL FLASHING W/ SILL FLASHING
8.08 SHUTTERS

DIVISION 9 – FINISHES

9.01 1/2" GYPSUM WALL BOARD. (GREEN BOARD IN WET AREAS).
9.02 PAINTED FINISH.
9.03 EXTERIOR STUCCO FINISH SYSTEM.
9.04 EXTERIOR STUCCO FINISH SYSTEM-RAISED PROFILE.
9.05 EIFS EXTRUDED BANDING.
9.06 EIFS ACCENTS.
9.07 5/8" GYPSUM WALL BOARD. (GREEN BOARD IN WET AREAS)
9.08 5/8" TYPE "X" GYPSUM WALL BOARD.
9.09 BLOCK MOULDING.
9.10 SUSPENDED ACOUSTICAL CEILING.
9.11 CONTROL JOINT
9.12 CEMENTITOUS SIDING
9.13 6" CEMENTITOUS SIDING TRIM BOARD
9.14 1" STUCCO REVEAL
9.15 3" STUCCO REVEAL
9.16 4" STUCCO REVEAL
9.17 1/2" CONTROL JOINT W/ FLASHING, SEE DETAIL 3/A302
9.18 STUCCO DRIP EDGE
9.19 HARDI VENTED SOFFIT PANELS OR EQUAL

DIVISION 10 – EQUIPMENT

10.01 PAINTED CAST ALUMINUM SIGNAGE, BACK-LIT
10.02 LIGHTING, SEE ELECTRICAL
10.03 GUTTER WITH DOWNSPOUTS

JWB ARCHITECTS
LIC. # AA26001266
2295 S. HIAWASSEE RD.
SUITE 304
ORLANDO, FLORIDA 32835
PH:407.298-5020
FX:407.298-5030

Owner:
ALI JAWAD

WALL SECTIONS

PLANTATION PLAZA

HWY 27
LEESBURG, FLORIDA

Architect of Record:
John W. Burt - AR93163

Revisions:
4 10-21-21-BLDG REVIEW CHANGES

Date:	Drawn By:	Checked By:
06-05-2019	RR	JWB

Project No.
19-019

Sheet No.
A404

HARBCO GENERAL CONTRACTORS, INC.

LAKE COUNTY BUILDING SERVICES
This document must be on jobsite for inspections.
This document was reviewed for code compliance; this does not relieve the applicant from correcting errors and omissions and complying with the current Florida Building Code.

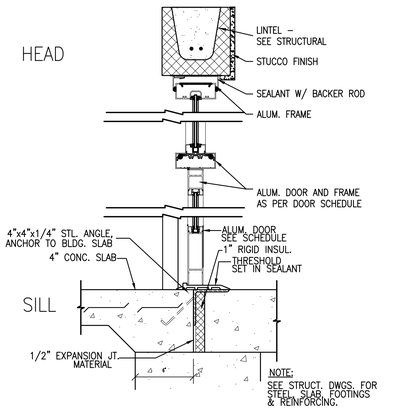

EXTERIOR DOOR DETAILS

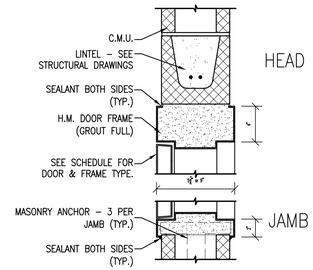

INTERIOR DOOR DETAILS

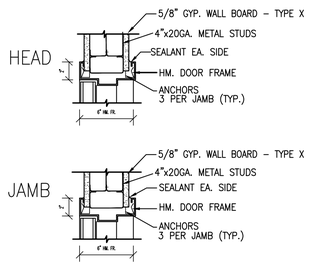

INTERIOR DOOR DETAILS

3 / A501 **DOOR DETAILS**
SCALE: 1 1/2" = 1'–0"

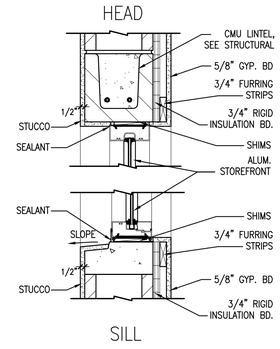

2 / A501 **WINDOW DETAILS**
SCALE: 1 1/2" = 1'–0"

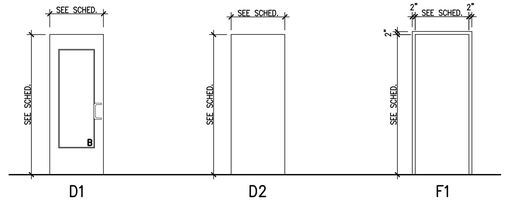

DOOR ELEVATIONS
SCALE: 1 / 4" = 1 ' – 0 "

DOOR FRAME ELEVATION
SCALE: 1 / 4" = 1 ' – 0 "

DOOR AND FRAME SCHEDULE

DOOR NOTES:
1. ALL INTERIOR DOORS TO BE PRE–HUNG, FLUSH SLAB.

	DOOR OPENING	DOOR SIZE WIDTH	DOOR SIZE HEIGHT	DOOR THICKNESS	DOOR MATERIAL	DOOR FINISH	DOOR ELEVATION	DOOR GLASS	FRAME MATERIAL	FRAME FINISH	FRAME ELEVATION	FRAME GLASS	HARDWARE PUSH/PULL	HARDWARE LOCKSET	HARDWARE STOP	HARDWARE CLOSER	WEATHER ST.	REMARKS
	101–A	PR. 3'–0"	8'–0"	1–3/4"	AL	PF	D1	T	AL	PF	A	T		L–1	S–2	2		
	101–B	PR. 3'–0"	8'–0"	1–3/4"	AL	PF	D1	T	AL	PF	O	T		L–1	S–2			
4	101–C	3'–0"	7'–0"	1–3/4"	HM	PT	D2	–	HM	PT	F1	–		L–1	S–2			
	102–A	3'–0"	8'–0"	1–3/4"	AL	PF	D1	T	AL	PF	B	T		L–1	S–2			
4	102–B	3'–0"	7'–0"	1–3/4"	HM	PT	D2	–	HM	PT	F1	–		L–1	S–2			
	103–A	3'–0"	8'–0"	1–3/4"	AL	PF	D1	T	AL	PF	C	T		L–1	S–2			
4	103–B	3'–0"	7'–0"	1–3/4"	HM	PT	D2	–	HM	PT	F1	–		L–1	S–2			
	104–A	PR. 3'–0"	8'–0"	1–3/4"	AL	PF	D1	T	AL	PF	C	–		L–1	S–2			
	104–C	3'–0"	7'–0"	1–3/4"	HM	PT	D2	–	HM	PT	F1	–		L–1	S–2			
	105–A	3'–0"	8'–0"	1–3/4"	AL	PF	D1	T	AL	PF	D	T		L–1	S–2			
	105–C	3'–0"	7'–0"	1–3/4"	HM	PT	D2	–	HM	PT	F1	–		L–1	S–2			
	106–A	PR. 3'–0"	8'–0"	1–3/4"	AL	PF	D1	T	AL	PF	R	T		L–1	S–2			
	106–C	3'–0"	7'–0"	1–3/4"	HM	PT	D2	–	HM	PT	F1	–		L–1	S–2			
	107–A	3'–0"	8'–0"	1–3/4"	AL	PF	D1	T	AL	PF	S	T		L–1	S–2			
	107–C	3'–0"	7'–0"	1–3/4"	HM	PT	D2	–	HM	PT	F1	–		L–1	S–2			
	108–A	PR. 3'–0"	8'–0"	1–3/4"	AL	PF	D1	T	AL	PF	T	T		L–1	S–2			
	108–C	3'–0"	7'–0"	1–3/4"	HM	PT	D2	–	HM	PT	F1	–		L–1	S–2			
	109–A	PR. 3'–0"	8'–0"	1–3/4"	AL	PF	D1	T	AL	PF	E	T		L–1	S–2			PROVIDE PANIC HARDWARE 2
	109–B	3'–0"	8'–0"	1–3/4"	AL	PF	D2	T	AL	PF	F1	T		L–1	S–2			PROVIDE PANIC HARDWARE
	109–C	3'–0"	7'–0"	1–3/4"	HM	PT	D2	–	HM	PT	F1	–		L–1	S–2			PROVIDE PANIC HARDWARE

ABBREVIATIONS
ST = STEEL — AL = ALUMINUM
HM = HOLLOW METAL — PF = PREFINISHED
WD = WOOD — PT = PAINTED
F = FLOAT GLASS — FX = FAUX WOOD, COMPOSITE
INS = INSULATED GLASS
T = TEMPERED GLASS

LOCKSETS
LOCKSET NOTES:
1. ALL INTERIOR DOOR HARDWARE TO BE FALCON TYPE "GRADE 2," REF. BUYER SPECIFICATIONS FOR FINISHES.

L–1 ENTRY FUNCTION
L–2 PRIVACY FUNCTION
L–3 STORAGE FUNCTION
L–4 PASSAGE FUNCTION
L–5 CLASSROOM
L–6 ENTRY FUNCTION W/ DEADBOLT LEAF 1, 2 THROW BOLTS (1 TOP, 1 BOTTOM) LEAF 2
L–7 KEYED THUMB TURN CYLINDER LOCK
L–8 CONCEALED EXIT HARDWARE W/ TOP & BOTTOM LATCH (MANUFACTURE'S STANDARD)

PUSH/PULL	TYPE	MODEL #	FINISH	BRAND
P–1 1/LEAF	PULL	CO–9	US32D	KAWNEER
1/LEAF	PUSH	CP II	US32D	KAWNEER

STOPS *MATCH LOCKSET FINISH
S–1 WALL STOP
S–2 HINGE STOP

CLOSER	TYPE	MODEL #	FINISH	BRAND
D–1	1/LEAF SURFACE CLOSER	MFG. STD.	#17 CLEAR	KAWNEER
D–2	1/LEAF SURFACE CLOSER	7700	26	NORTON

WEATHERSTRIP	TYPE	MODEL #	FINISH	BRAND
W–1	WEATHER STRIPPING AND THRESHOLD	MFG. STD.	MFG. STD	MFG. STD.
W–2	THRESHOLD	171A–36"	AL	PEMCO
	WEATHERSTRIP	SET 303–AV	AL	PEMCO
	DRIP CAP	346C–36"	AL	PEMCO
	DOOR BOTTOM	216AV–36"	AL	PEMCO

GLAZING SCHEDULE

ITEM	GLASS TYPE
WINDOWS	
GLAZING TYPE 1 (A)	CLEAR 1/4"
GLAZING TYPE 2 (B)	CLEAR/TEMPERED 1/4"
GLAZING TYPE 3 (C)	1/4" SPANDREL / TEMPERED

LAKE COUNTY BUILDING SERVICES
This document must be on jobsite for inspections.
This document was reviewed for code compliance; this does not relieve the applicant from correcting errors and omissions and complying with the current Florida Building Code.

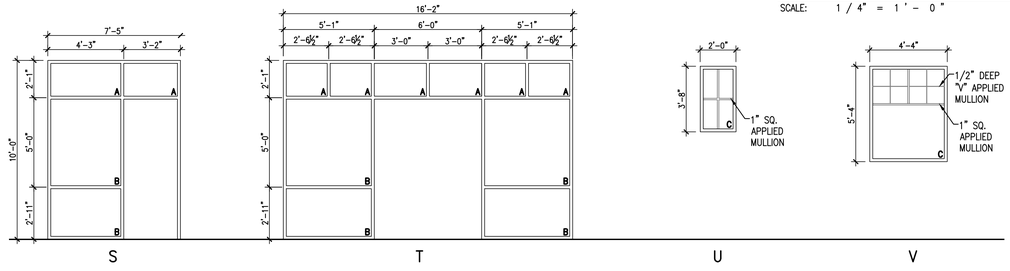

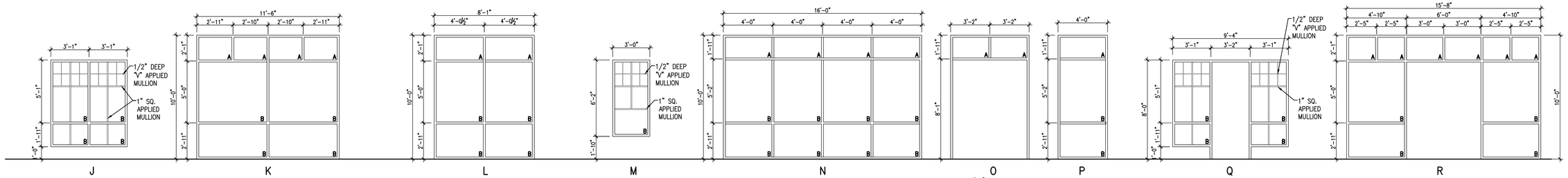

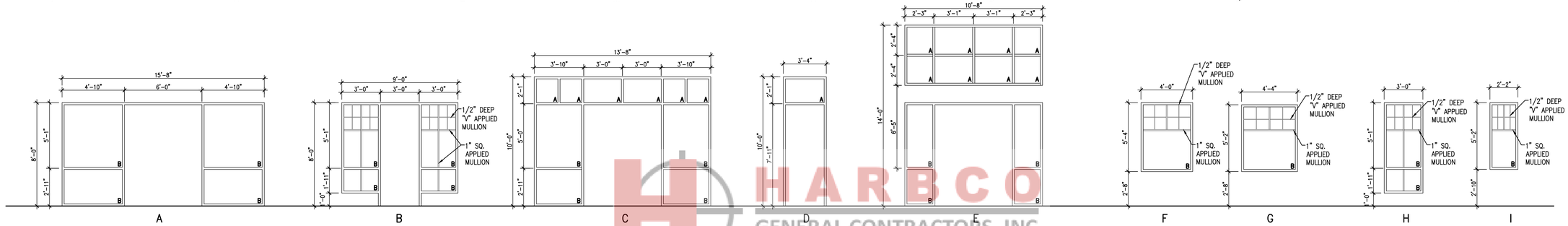

STOREFRONT ELEVATIONS
SCALE: 1 / 4" = 1 ' – 0 "

HARBCO GENERAL CONTRACTORS, INC.

JWB ARCHITECTS
LIC. # AA26001266
2295 S. HIAWASSEE RD.
SUITE 304
ORLANDO, FLORIDA 32835
PH:407.298-5020
FX:407.298-5030

Owner:
ALI JAWAD

SCHEDULES + DETAILS

PLANTATION PLAZA
HWY 27
LEESBURG, FLORIDA

Architect of Record
John W. Burt – AR93163

Revisions:
1 — 11-01-19–BLDG REVIEW CHANGES
2 — 03-18-21–BLDG REVIEW CHANGES
4 — 10-21-21–BLDG REVIEW CHANGES

Date:	Drawn By:	Checked By:
06-05-2019	RR	JWB

Project No.
19-019

Sheet No.
A501